# Profec Nr. 331 Union coupler stainless steel 316 2" female thread x male thread 10bar type flat (0080698)




PROFEC

bosta
bringing water to life

# TECHNICAL SPECIFICATIONS

| | |
|---|---|
| Type | flat |
| Material | stainless steel 316 |
| Material seal | teflon |
| Connection | female thread x male thread |
| Fitting nr. | Nr. 331 |
| Pressure | 10 bar |
| Size | 2" |
| WebshopURL | https://www.bosta.com/en-gb/profec-nr.-331-union-coupler-stainless-steel-316-2-female-thread-x-male-thread-10bar-type-flat-0080698 |
| Length | 88 mm |
| Outer ø | 81 mm |

# DIMENSIONS

| | |
|---|---|
| Kn | 81 mm |
| L | 88 mm |
| ØDi-1 | 2 " |

| | |
|---|---|
| ØDo-2 | 2 " |

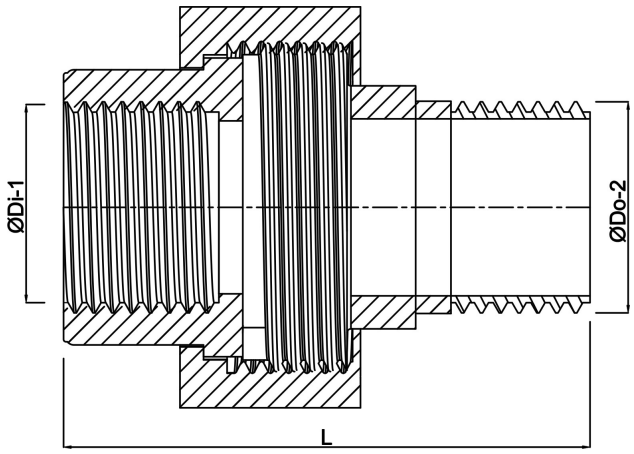


# Last modified date: 30/10/2026

Bosta UK Ltd.
Reflection House
Olding Road
Bury St. Edmunds
Suffolk
IP33 3TA
T +44 (0) 1284 716580
E enquiries@bosta.co.uk
http://www.bosta.com