VDL T-piece 45° PVC-U 200 mm glue socket 6bar grey (0100735)



Van de Lande

bosta
bringing water to life

TECHNICAL SPECIFICATIONS

Colour	grey
Material	PVC-U
Size	200 mm
Connection	glue socket
WebshopURL	https://www.bosta.com/en-gb/vdl-t-piece-45-pvc-u-200-mm-glue-socket-6bar-grey-0100735
Pressure	6 bar

DIMENSIONS

Cr-1	373 mm
Ct-1	373 mm
L	529 mm
P-1	107 mm
P-2	107 mm
P-3	107 mm
ØDi-1	200 mm
ØDi-2	200 mm

ØDi-3	200 mm
ß	45 °

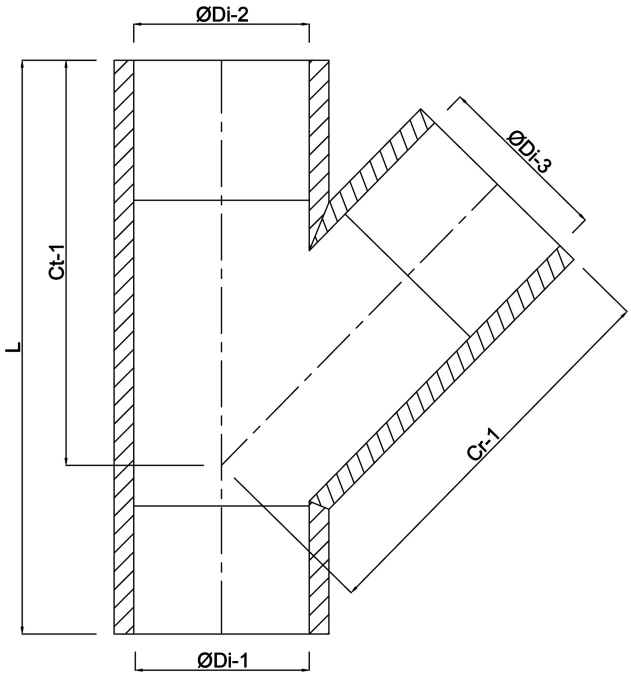

Last modified date: 01/11/2026

Bosta UK Ltd.
Reflection House
Olding Road
Bury St. Edmunds
Suffolk
IP33 3TA
T +44 (0) 1284 716580
E enquiries@bosta.co.uk
http://www.bosta.com