VDL Ball valve PVC-U 40 mm glue socket 16bar DN32 grey type EIL viton (7018370)



Van de Lande

bosta
bringing water to life

TECHNICAL SPECIFICATIONS

Colour	grey
Type	EIL viton
Material	PVC-U
Operation	lever
Colour lever	green
Handle material	PVC-U
Housing construction	2-part
Material housing	PVC-U
Material seal	viton
Connection	glue socket
Temperature range	0°C - 60°C
Pressure	16 bar
Size	40 mm
WebshopURL	https://www.bosta.com/en-gb/vdl-ball-valve-pvc-u-40-mm-glue-socket-16bar-dn32-grey-type-eil-viton-7018370
DN	32

DIMENSIONS

Ct-1	75 mm
Lb	117 mm
R	106 mm
ØDf	32 mm
ØDi-1	40 mm
ØDi-2	40 mm

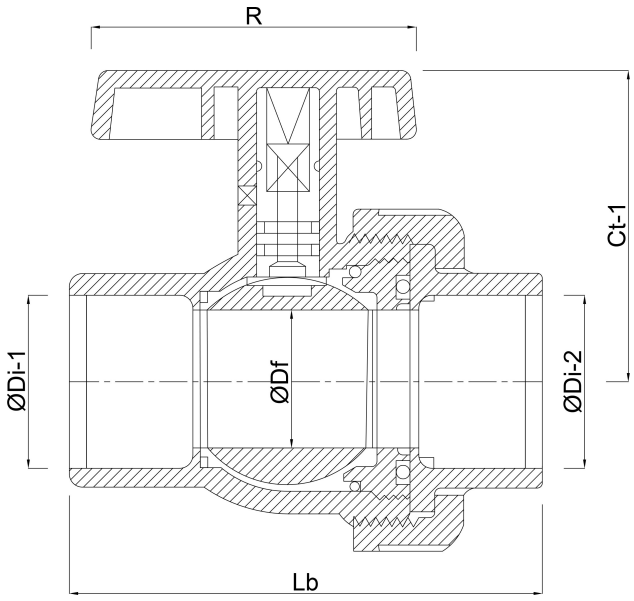

Last modified date: 01/11/2026

Bosta UK Ltd.
Reflection House
Olding Road
Bury St. Edmunds

Suffolk
IP33 3TA
T +44 (0) 1284 716580
E enquiries@bosta.co.uk
http://www.bosta.com

bosta
bringing water to life