Profec Butterfly valve ductile iron (GGG40) epoxy coating DN150 flange 10bar DN150 blue PN6/10/16 type 600 (0401855)



PROFEC

bosta
bringing water to life

TECHNICAL SPECIFICATIONS

Colour	blue
Type	600
Material	ductile iron (GGG40)
Surface treatment	epoxy coating
Operation	lever
Colour lever	black
Handle material	malleable cast iron
Material valve	ductile iron
Material spindle	stainless steel 316
Seat material	EPDM
Material housing	ductile iron (GGG40)
Material seal	EPDM
Connection	flange
Flange	PN6/10/16
Temperature range	0°C - 90°C
Pressure	10 bar
Size	DN150

WebshopURL	https://www.bosta.com/en-gb/profec-butterfly-valve-ductile-iron-ggg40-epoxy-coating-dn150-flange-10bar-dn150-blue-pn6-10-16-type-600-0401855
DN	150
Width	56 mm
Height	401 mm
Torque	75 Nm
Bolt hole	22 mm
Holes	8

DIMENSIONS

Construction length	din 3202 k1, iso 5752
Ct-1	253 mm
PCD	225/240 mm
R	260 mm
W-1	56 mm
W-2	112 mm

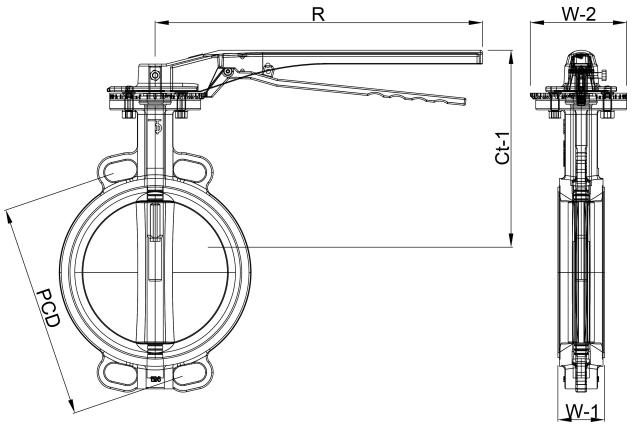

Last modified date: 01/11/2026

Bosta UK Ltd.
Reflection House
Olding Road
Bury St. Edmunds
Suffolk
IP33 3TA
T +44 (0) 1284 716580
E enquiries@bosta.co.uk
http://www.bosta.com

bosta
bringing water to life