Profec Nr. 130 T-piece 90° cast iron galvanised 3" x 1" x 3" female thread 25bar DVGW (1013050)



PROFEC

bosta
bringing water to life

TECHNICAL SPECIFICATIONS

Material	Cast iron
Surface treatment	galvanised
Approval	DVGW
Connection	female thread
Fitting nr.	Nr. 130
Pressure	25 bar
Size	3" x 1" x 3"
WebshopURL	https://www.bosta.com/en-gb/profec-nr.-130-t-piece-90-cast-iron-galvanised-3-x-1-x-3-female-thread-25bar-dvgw-1013050

DIMENSIONS

Cr-1	67 mm
F-1	30 mm
F-2	20 mm
F-3	30 mm
L	102 mm

ØDi-1	3 "
ØDi-2	1 "
ØDi-3	3 "
ß	90 °

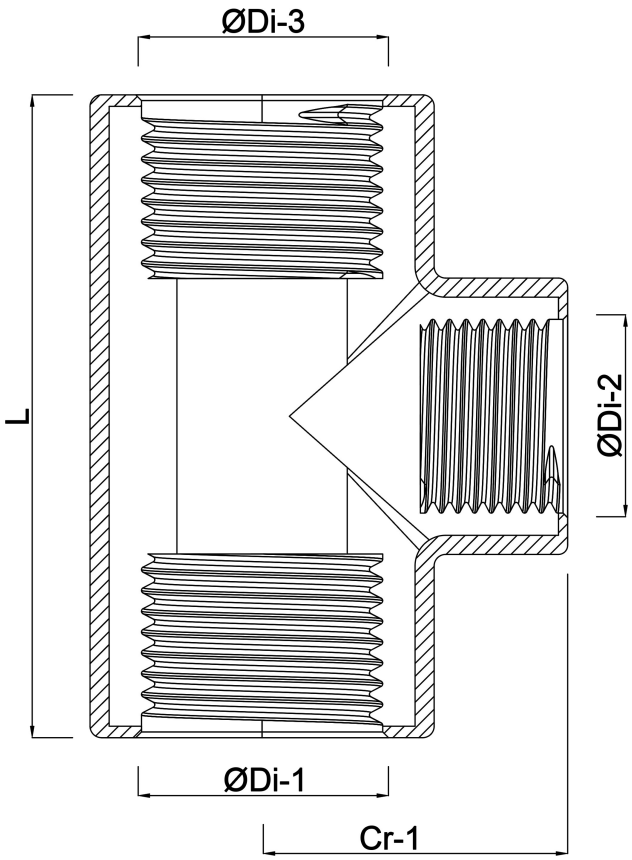

Last modified date: 01/11/2026

Bosta UK Ltd.
Reflection House
Olding Road
Bury St. Edmunds
Suffolk
IP33 3TA
T +44 (0) 1284 716580

E enquiries@bosta.co.uk
http://www.bosta.com

bosta
bringing water to life