# Backing ring PP/steel PP 140 mm SDR11 16bar DN125 black PN10/16 (0101938)



bosta
bringing water to life

# TECHNICAL SPECIFICATIONS

| | |
|---|---|
| Colour | black |
| Material | PP/steel |
| Surface treatment | PP |
| Class | SDR11 |
| Pressure | 16 bar |
| Size | 140 mm |
| WebshopURL | https://www.bosta.com/en-gb/backing-ring-pp-steel-pp-140-mm-sdr11-16bar-dn125-black-pn10-16-0101938 |
| DN | 125 |
| Flange | PN10/16 |
| Outer ø | 250 mm |
| Weight | 1.94 kg |
| Thickness | 24 mm |
| Bolt hole | 18 mm |
| Holes | 8 |

# DIMENSIONS

| | |
|---|---|
| O | 18 mm |
| PCD | 210 mm |
| ØDi-1 | 158 mm |

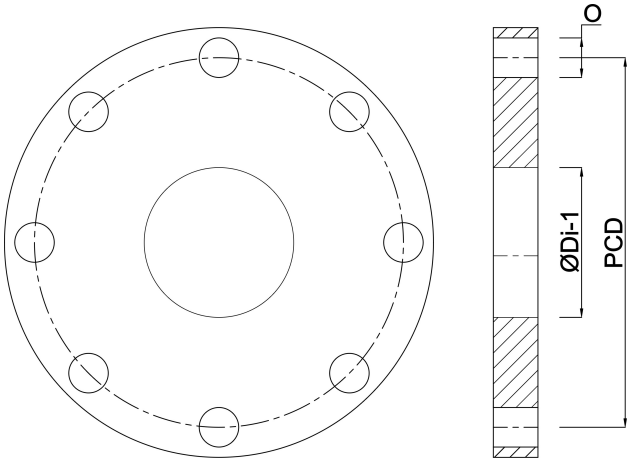


## Last modified date: 30/10/2026

Bosta UK Ltd.
Reflection House
Olding Road
Bury St. Edmunds
Suffolk
IP33 3TA
T +44 (0) 1284 716580
E enquiries@bosta.co.uk
http://www.bosta.com