Profec T-piece 45° PVC-U 75 mm glue socket 16bar grey (0110276)



PROFEC

bosta
bringing water to life

TECHNICAL SPECIFICATIONS

Colour	grey
Material	PVC-U
Connection	glue socket
Size	75 mm
WebshopURL	https://www.bosta.com/en-gb/profec-t-piece-45-pvc-u-75-mm-glue-socket-16bar-grey-0110276
Pressure	16 bar

DIMENSIONS

Cr-1	138 mm
Ct-1	138 mm
L	199 mm
ØDi-1	75 mm
ØDi-2	75 mm
ØDi-3	75 mm
ß	45 °

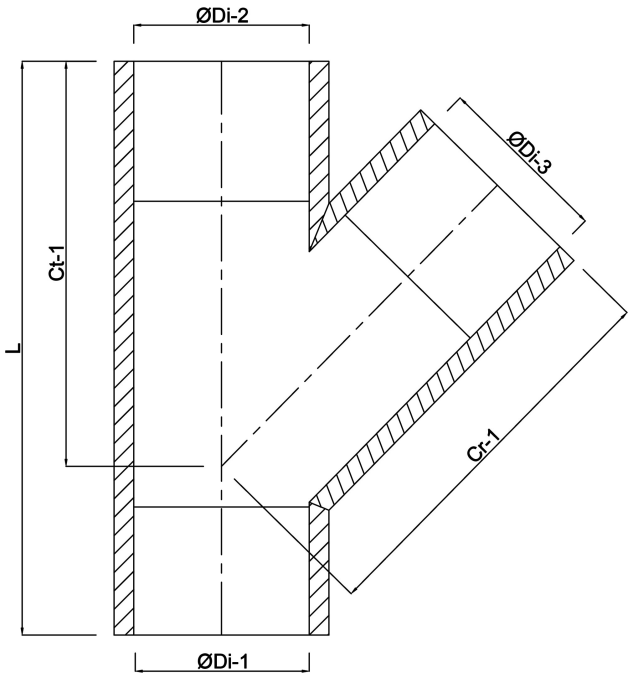

Last modified date: 30/10/2026

Bosta UK Ltd.
Reflection House
Olding Road
Bury St. Edmunds
Suffolk
IP33 3TA
T +44 (0) 1284 716580
E enquiries@bosta.co.uk
http://www.bosta.com

bosta
bringing water to life