Blind flange stainless steel 316
DN150 DIN flange 16bar
DN150 PN16 (0080662)



bosta
bringing water to life

TECHNICAL SPECIFICATIONS

Material	stainless steel 316
Connection	DIN flange
DIN Standard	DIN 2527
Flange	PN16
Pressure	16 bar
Size	DN150
WebshopURL	https://www.bosta.com/en-gb/blind-flange-stainless-steel-316-dn150-din-flange-16bar-dn150-pn16-0080662
DN	150
Outer ø	285 mm
Weight	10.5 kg
Thickness	22 mm
Bolt hole	22 mm
Holes	8

DIMENSIONS

O	22 mm

PCD	240 mm

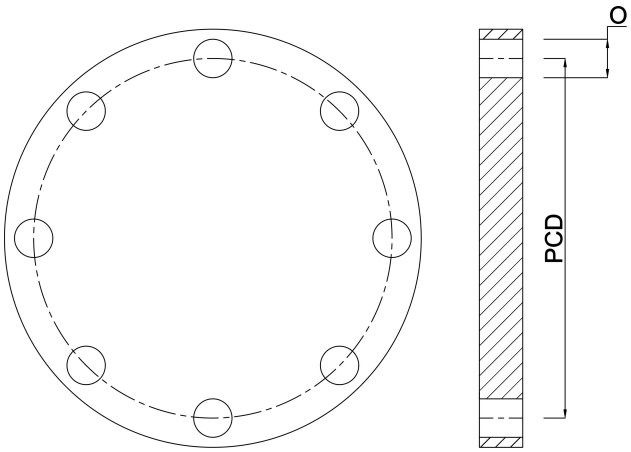

Last modified date: 30/10/2026

Bosta UK Ltd.
Reflection House
Olding Road
Bury St. Edmunds
Suffolk
IP33 3TA
T +44 (0) 1284 716580
E enquiries@bosta.co.uk
http://www.bosta.com