Ball valve PVC-U 1 1/2" imperial glue socket 16bar white type Industrial (7037502)



bosta
bringing water to life

TECHNICAL SPECIFICATIONS

Colour	white
Type	Industrial
Material	PVC-U
Operation	lever
Colour lever	red
Handle material	ABS/stainless steel
Housing construction	3-part
Ball material	PVC-U
Material housing	PE/EPDM
Material seal	EPDM
Connection	imperial glue socket
Max. temperature	60 °C
Minimum medium temperature (continuous)	0 °C
Pressure	16 bar
Size	1 1/2"
WebshopURL	https://www.bosta.com/en-gb/ball-valve-pvc-u-1-1-2-imperial-glue-socket-16bar-white-type-industrial-7037502

DIMENSIONS

Ct-1	93 mm
Lb	148 mm
R	65 mm
ØDf	40 mm
ØDi-1	1 1/2 "
ØDi-2	1 1/2 "

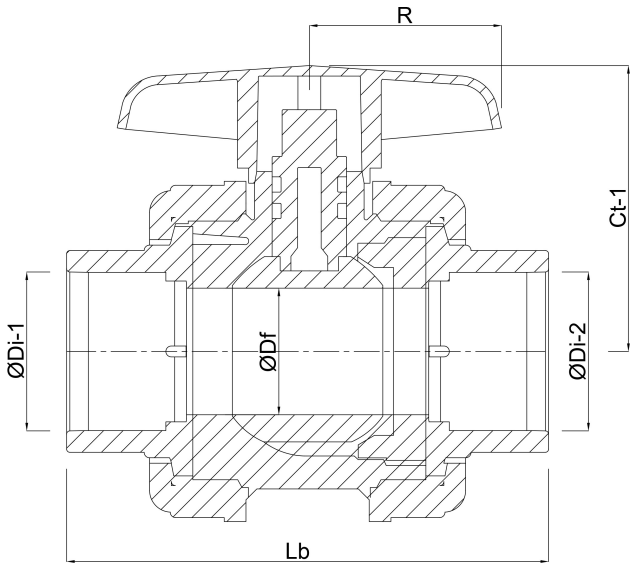

Last modified date: 02/11/2026

Bosta UK Ltd.
Reflection House
Olding Road
Bury St. Edmunds
Suffolk

bosta
bringing water to life

IP33 3TA
T +44 (0) 1284 716580
E enquiries@bosta.co.uk
http://www.bosta.com

bosta
bringing water to life