Profec Swing check valve with lifting device ductile iron (GGG40) epoxy coating DN80 DIN flange 16bar DN80 blue PN10/16 (0402636)



PROFEC

bosta
bringing water to life

TECHNICAL SPECIFICATIONS

Colour	blue
Material	ductile iron (GGG40)
Surface treatment	epoxy coating
Material cover	ductile iron
Material housing	ductile iron (GGG40)
Material seal	NBR
Connection	DIN flange
Gasket	NBR
Temperature range	0°C - 80°C
Pressure	16 bar
Capacity	93 m^3/h
Size	DN80
WebshopURL	https://www.bosta.com/en-gb/profec-swing-check-valve-with-lifting-device-ductile-iron-ggg40-epoxy-coating-dn80-din-flange-16bar-dn80-blue-pn10-16-0402636
Length	260 mm
DN	80
Flange	PN10/16

Outer ø	200 mm
PCD	160 mm
Holes	8

DIMENSIONS

Ct-1	100 mm
L	260 mm
PCD	160 mm

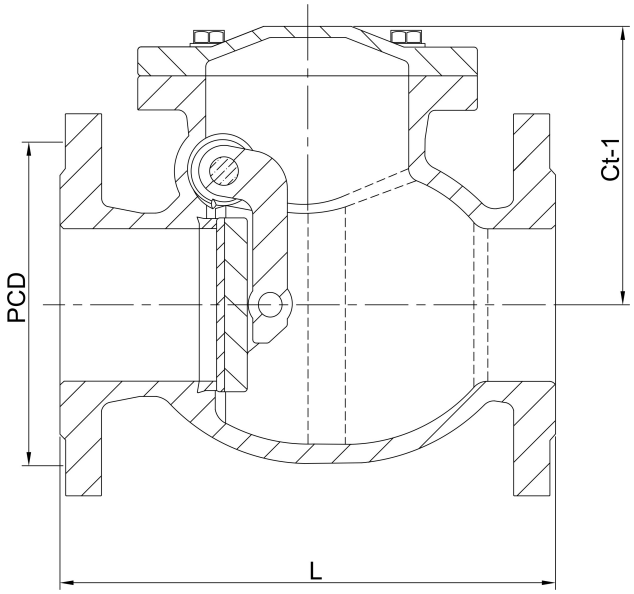

Last modified date: 31/10/2026

Bosta UK Ltd.
Reflection House
Olding Road
Bury St. Edmunds

Suffolk
IP33 3TA
T +44 (0) 1284 716580
E enquiries@bosta.co.uk
http://www.bosta.com

bosta
bringing water to life