Grundfos Variable speed circulation pump stainless steel 2" male thread 10bar 1.19A 230VAC black/red WRAS type MAGNA3 32-80N (180) (7039838)



GRUNDFOS

bosta
bringing water to life

TECHNICAL SPECIFICATIONS

Colour	black/red
Material	stainless steel
Approval	WRAS
Pump body	stainless steel
Material impeller 1	fibreglass-reinforced PES
Connection	male thread
Voltage	230VAC
Max. temperature	110 °C
Minimum medium temperature (continuous)	-10 °C
Impellers	1
Frequency	50 Hz
Maximum ambient temperature	40 °C
Pressure	10 bar
Minimum ambient temperature	0 °C
Type	MAGNA3 32-80N (180)
Max. head	8 m

Size	2"
WebshopURL	https://www.bosta.com/en-gb/grundfos-variable-speed-circulation-pump-stainless-steel-2-male-thread-10bar-1.19a-230vac-black-red-wras-type-magna3-32-80n-180-7039838
Ampere	1.19 A

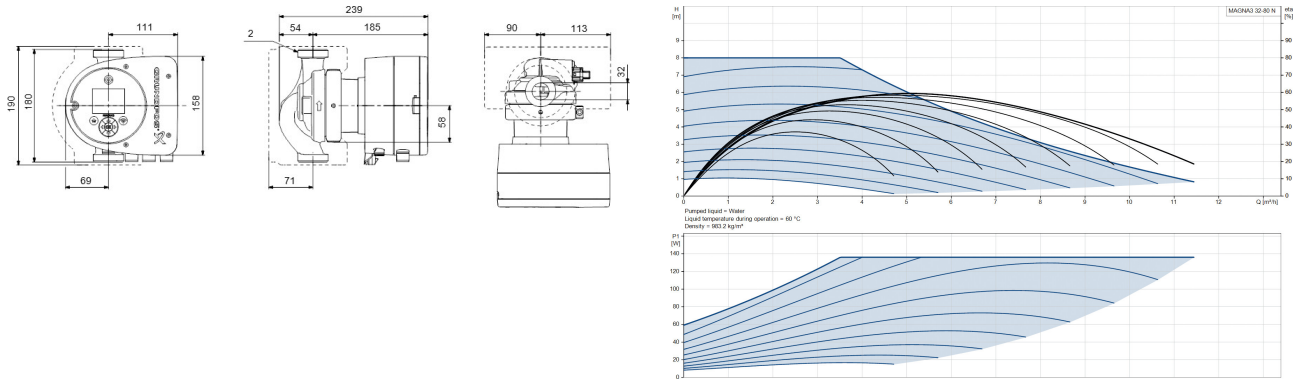

Last modified date: 02/11/2026

Bosta UK Ltd.
Reflection House
Olding Road
Bury St. Edmunds
Suffolk
IP33 3TA
T +44 (0) 1284 716580
E enquiries@bosta.co.uk
http://www.bosta.com