Profec Hose tail brass 1/2" x 12 mm female thread x hose tail (0710514)



PROFEC

bosta
bringing water to life

TECHNICAL SPECIFICATIONS

Material	brass
Connection	female thread x hose tail
Max. temp.	120 °C
Size	1/2" x 12 mm
WebshopURL	https://www.bosta.com/en-gb/profec-hose-tail-brass-1-2-x-12-mm-female-thread-x-hose-tail-0710514
Max. temperature	120 °C
Spanner	24

DIMENSIONS

F-1	13 mm
L	44 mm
Lb	44 mm
P-1	20 mm
ØDi-1	1/2 "
ØDo-2	12 mm

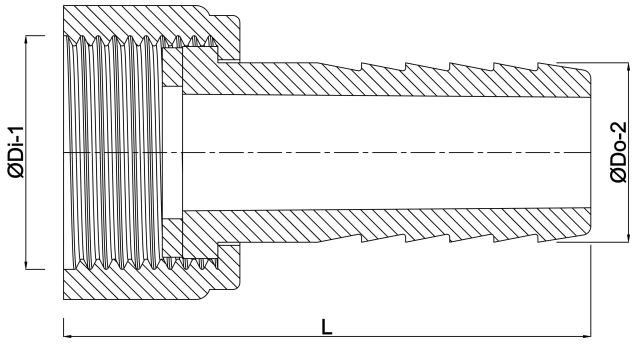

Last modified date: 31/10/2026

Bosta UK Ltd.
Reflection House
Olding Road
Bury St. Edmunds
Suffolk
IP33 3TA
T +44 (0) 1284 716580
E enquiries@bosta.co.uk
http://www.bosta.com