VDL Reducer bush PVC-U 140 mm x 125 mm glue spigot x glue socket 16bar grey (7002683)

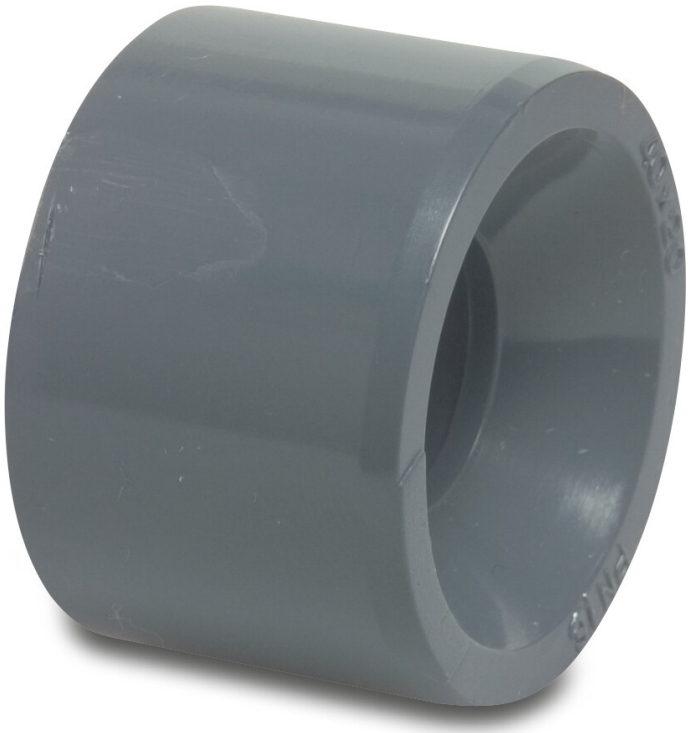

Van de Lande

bosta
bringing water to life

TECHNICAL SPECIFICATIONS

Colour	grey
Material	PVC-U
Size	140 mm x 125 mm
Connection	glue spigot x glue socket
WebshopURL	https://www.bosta.com/en-gb/vdl-reducer-bush-pvc-u-140-mm-x-125-mm-glue-spigot-x-glue-socket-16bar-grey-7002683
Pressure	16 bar

DIMENSIONS

L	76 mm
P-1	69 mm
ØDi-2	125 mm
ØDo-1	140 mm

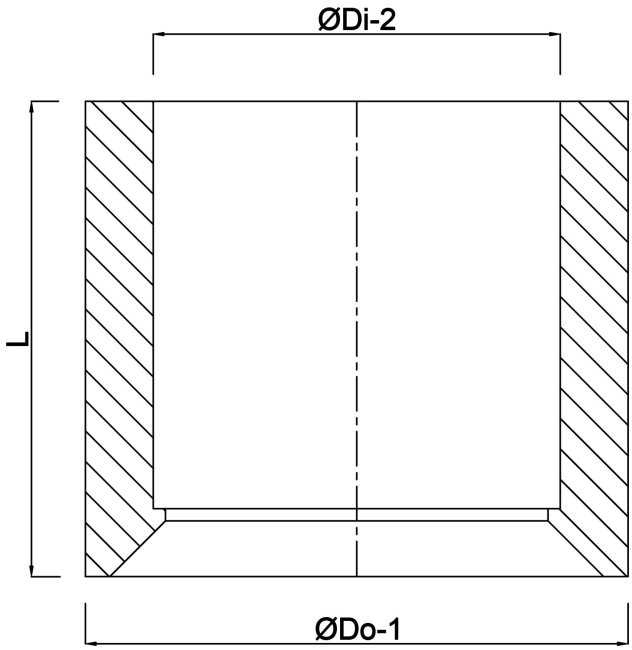

Last modified date: 01/11/2026

Bosta UK Ltd.
Reflection House
Olding Road
Bury St. Edmunds
Suffolk
IP33 3TA
T +44 (0) 1284 716580
E enquiries@bosta.co.uk
http://www.bosta.com

bosta
bringing water to life