Profec Nr. 331 Union coupler stainless steel 316 1/2" female thread x male thread 10bar type flat (0080693)



PROFEC

bosta
bringing water to life

TECHNICAL SPECIFICATIONS

Type	flat
Material	stainless steel 316
Material seal	teflon
Connection	female thread x male thread
Fitting nr.	Nr. 331
Pressure	10 bar
Size	1/2"
WebshopURL	https://www.bosta.com/en-gb/profec-nr.-331-union-coupler-stainless-steel-316-1-2-female-thread-x-male-thread-10bar-type-flat-0080693
Length	53 mm
Outer ø	35 mm

DIMENSIONS

Kn	35 mm
L	53 mm
ØDi-1	1/2 "

ØDo-2	1/2 "

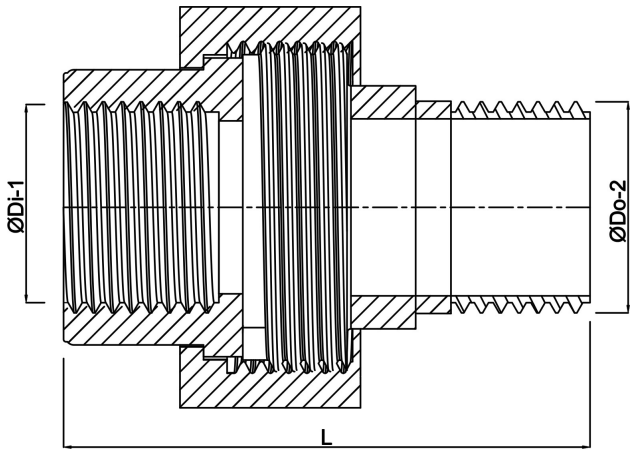

Last modified date: 30/10/2026

Bosta UK Ltd.
Reflection House
Olding Road
Bury St. Edmunds
Suffolk
IP33 3TA
T +44 (0) 1284 716580
E enquiries@bosta.co.uk
http://www.bosta.com