Profec Reducer bush PVC-U 110 mm x 75 mm glue spigot x glue socket 16bar grey (0110759)

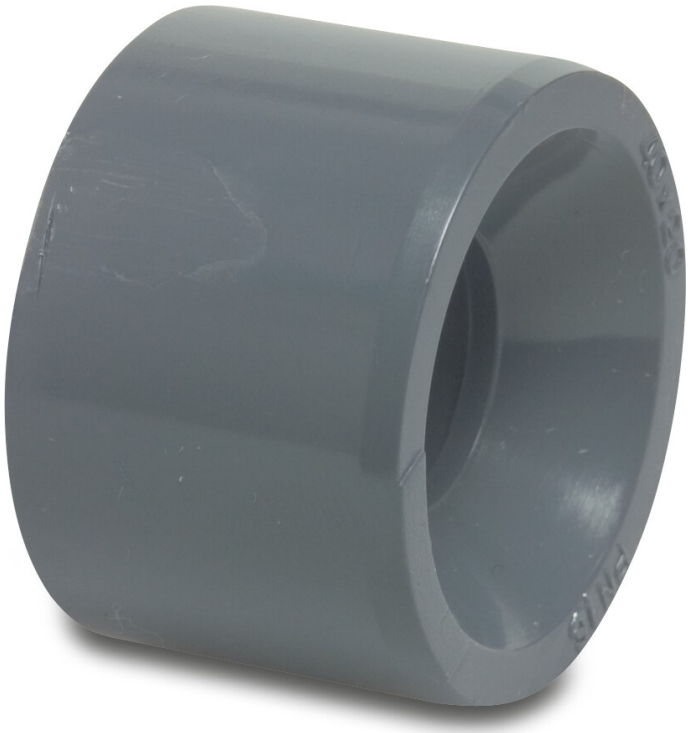

PROFEC

bosta
bringing water to life

TECHNICAL SPECIFICATIONS

Colour	grey
Material	PVC-U
Connection	glue spigot x glue socket
Pressure	16 bar
Size	110 mm x 75 mm
WebshopURL	https://www.bosta.com/en-gb/profec-reducer-bush-pvc-u-110-mm-x-75-mm-glue-spigot-x-glue-socket-16bar-grey-0110759

DIMENSIONS

L	61 mm
Lb	61 mm
ØDi-2	75 mm
ØDo-1	110 mm

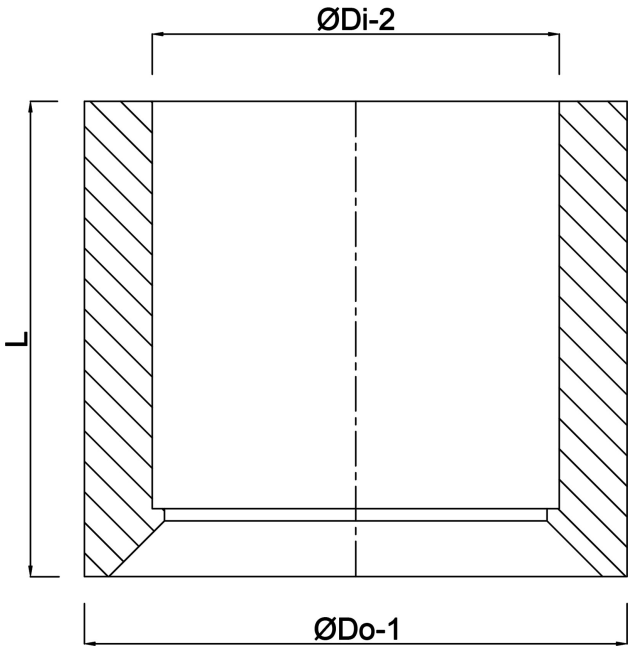

Last modified date: 30/10/2026

Bosta UK Ltd.
Reflection House
Olding Road
Bury St. Edmunds
Suffolk
IP33 3TA
T +44 (0) 1284 716580
E enquiries@bosta.co.uk
http://www.bosta.com

bosta
bringing water to life