VDL Reducer socket PVC-U 125 mm x 90 mm glue socket 10bar grey type made from tubing (7002466)



Van de Lande

bosta
bringing water to life

TECHNICAL SPECIFICATIONS

Colour	grey
Type	made from tubing
Material	PVC-U
Size	125 mm x 90 mm
Connection	glue socket
WebshopURL	https://www.bosta.com/en-gb/vdl-reducer-socket-pvc-u-125-mm-x-90-mm-glue-socket-10bar-grey-type-made-from-tubing-7002466
Pressure	10 bar

DIMENSIONS

L	195 mm
Mold	hand formed
P-1	72 mm
P-2	53 mm
ØDi-1	125 mm
ØDi-2	90 mm

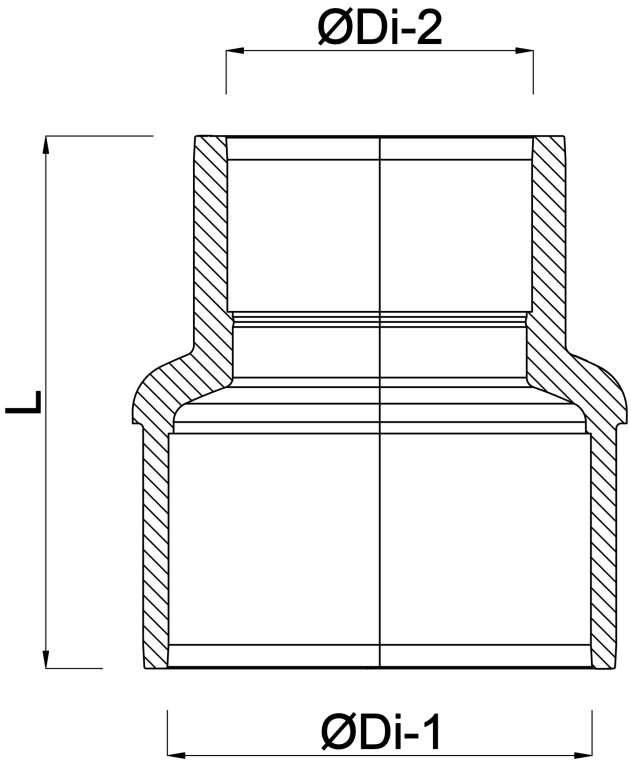

Last modified date: 01/11/2026

Bosta UK Ltd.
Reflection House
Olding Road
Bury St. Edmunds
Suffolk
IP33 3TA
T +44 (0) 1284 716580
E enquiries@bosta.co.uk
http://www.bosta.com

bosta
bringing water to life