Profec Swing check valve with lifting device ductile iron (GGG40) epoxy coating DN300 DIN flange 16bar DN300 blue PN10 (0402642)



PROFEC

bosta
bringing water to life

TECHNICAL SPECIFICATIONS

Colour	blue
Material	ductile iron (GGG40)
Surface treatment	epoxy coating
Material cover	ductile iron
Material housing	ductile iron (GGG40)
Material seal	NBR
Connection	DIN flange
Gasket	NBR
Temperature range	0°C - 80°C
Pressure	16 bar
Capacity	1557 m^3/h
Size	DN300
WebshopURL	https://www.bosta.com/en-gb/profec-swing-check-valve-with-lifting-device-ductile-iron-ggg40-epoxy-coating-dn300-din-flange-16bar-dn300-blue-pn10-0402642
Length	700 mm
DN	300
Flange	PN10

Outer ø	460 mm
PCD	400 mm
Holes	12

DIMENSIONS

Ct-1	330 mm
L	700 mm
PCD	400 mm

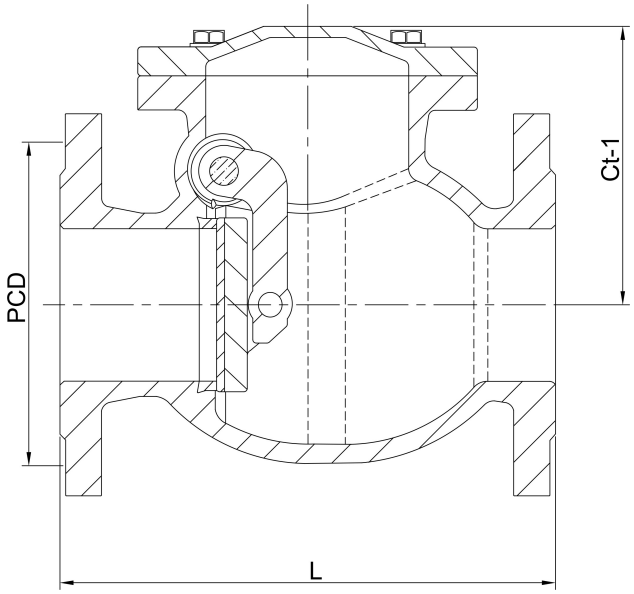

Last modified date: 31/10/2026

Bosta UK Ltd.
Reflection House
Olding Road
Bury St. Edmunds

Suffolk
IP33 3TA
T +44 (0) 1284 716580
E enquiries@bosta.co.uk
http://www.bosta.com

bosta
bringing water to life