Profec Backing ring PVC-U 160 mm 16bar DN150 grey PN10 (0110929)



PROFEC

bosta
bringing water to life

TECHNICAL SPECIFICATIONS

Colour	grey
Material	PVC-U
Suitable for	0110909
Suitable for	
Size	160 mm
Bolt	M20x150
Packaging	10 pcs
WebshopURL	https://www.bosta.com/en-gb/profec-backing-ring-pvc-u-160-mm-16bar-dn150-grey-pn10-0110929
DN	150
Inner ø	190 mm
Flange	PN10
Outer ø	285 mm
Weight	1.034 kg
Thickness	28 mm
Pressure	16 bar
Bolt hole	22 mm

Holes	8

DIMENSIONS

Db	285 mm
O	22 mm
PCD	240 mm
ØDi-1	190 mm

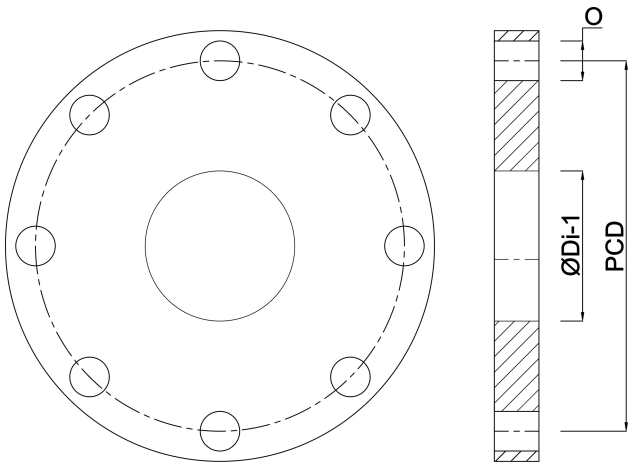

Last modified date: 30/10/2026

Bosta UK Ltd.
Reflection House
Olding Road
Bury St. Edmunds
Suffolk
IP33 3TA
T +44 (0) 1284 716580
E enquiries@bosta.co.uk
http://www.bosta.com