Profec Ball valve PVC-U 3" imperial glue socket 10bar grey type 2001 (0112068)



PROFEC

bosta
bringing water to life

TECHNICAL SPECIFICATIONS

Colour	grey
Type	2001
Material	PVC-U
Operation	lever
Colour lever	red
Handle material	PVC-U
Housing construction	3-part
Ball material	PVC-U
Material housing	PVC-U
Material seal	PE/EPDM
Connection	imperial glue socket
Temperature range	0°C - 60°C
Size	3"
WebshopURL	https://www.bosta.com/en-gb/profec-ball-valve-pvc-u-3-imperial-glue-socket-10bar-grey-type-2001-0112068
Pressure	10 bar

DIMENSIONS

Ct-1	179 mm
Lb	269 mm
R	165 mm
ØDf	79.5 mm
ØDi-1	3 "
ØDi-2	3 "

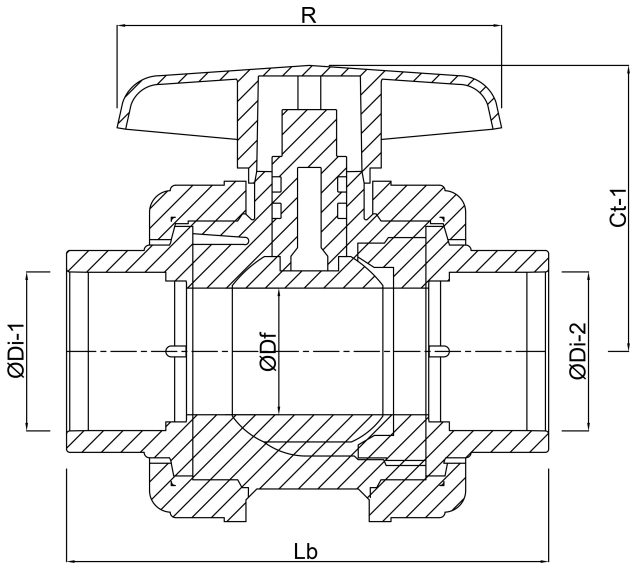

Last modified date: 31/10/2026

Bosta UK Ltd.
Reflection House
Olding Road
Bury St. Edmunds
Suffolk

IP33 3TA
T +44 (0) 1284 716580
E enquiries@bosta.co.uk
http://www.bosta.com

bosta
bringing water to life