VDL Union coupler PVC-U 75 mm glue socket 10bar grey type A (7002850)



Van de Lande

bosta
bringing water to life

TECHNICAL SPECIFICATIONS

Colour	grey
Type	A
Material	PVC-U
Material seal	EPDM
Connection	glue socket
Size	75 mm
WebshopURL	https://www.bosta.com/en-gb/vdl-union-coupler-pvc-u-75-mm-glue-socket-10bar-grey-type-a-7002850
Pressure	10 bar

DIMENSIONS

K-2	94 mm
L	116 mm
ØDi-1	75 mm
ØDi-2	75 mm

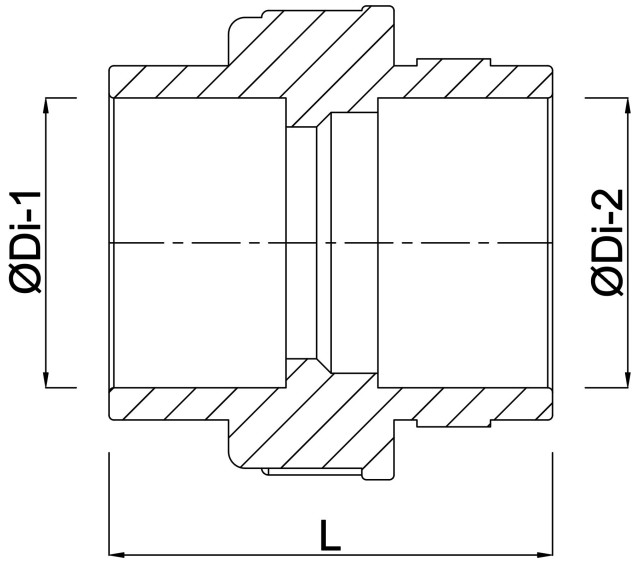

Last modified date: 01/11/2026

Bosta UK Ltd.
Reflection House
Olding Road
Bury St. Edmunds
Suffolk
IP33 3TA
T +44 (0) 1284 716580
E enquiries@bosta.co.uk
http://www.bosta.com

bosta
bringing water to life