Profec Swing check valve with lifting device ductile iron (GGG40) epoxy coating DN50 DIN flange 16bar DN50 blue PN10/16 (0402634)



PROFEC

bosta
bringing water to life

TECHNICAL SPECIFICATIONS

Colour	blue
Material	ductile iron (GGG40)
Surface treatment	epoxy coating
Material cover	ductile iron
Material housing	ductile iron (GGG40)
Material seal	NBR
Connection	DIN flange
Gasket	NBR
Temperature range	0°C - 80°C
Pressure	16 bar
Capacity	41 m^3/h
Size	DN50
WebshopURL	https://www.bosta.com/en-gb/profec-swing-check-valve-with-lifting-device-ductile-iron-ggg40-epoxy-coating-dn50-din-flange-16bar-dn50-blue-pn10-16-0402634
Length	200 mm
DN	50
Flange	PN10/16

Outer ø	165 mm
PCD	125 mm
Holes	4

DIMENSIONS

Ct-1	82.5 mm
L	200 mm
PCD	125 mm

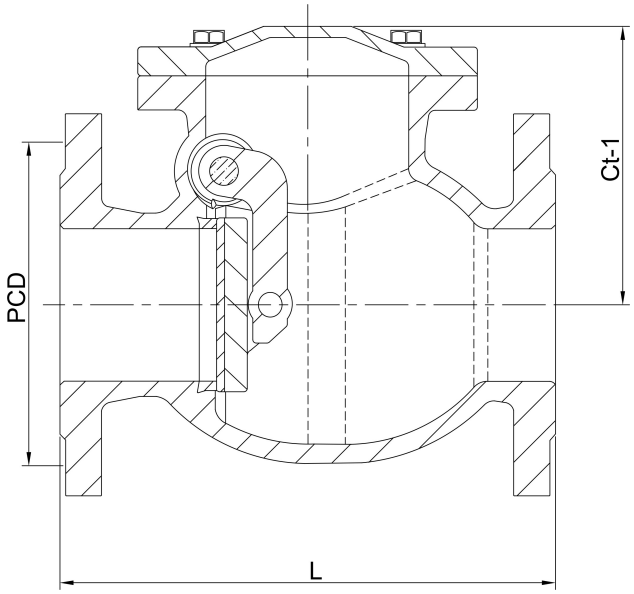

Last modified date: 31/10/2026

Bosta UK Ltd.
Reflection House
Olding Road
Bury St. Edmunds

Suffolk
IP33 3TA
T +44 (0) 1284 716580
E enquiries@bosta.co.uk
http://www.bosta.com

bosta
bringing water to life