VDL Socket PVC-U 10 mm glue socket 16bar grey KIWA (7018279)



Van de Lande

bosta
bringing water to life

TECHNICAL SPECIFICATIONS

Colour	grey
Material	PVC-U
Approval	KIWA
Connection	glue socket
Size	10 mm
WebshopURL	https://www.bosta.com/en-gb/vdl-socket-pvc-u-10-mm-glue-socket-16bar-grey-kiwa-7018279
Pressure	16 bar

DIMENSIONS

L	27 mm
T	3 mm
ØDi-1	10 mm
ØDi-2	10 mm

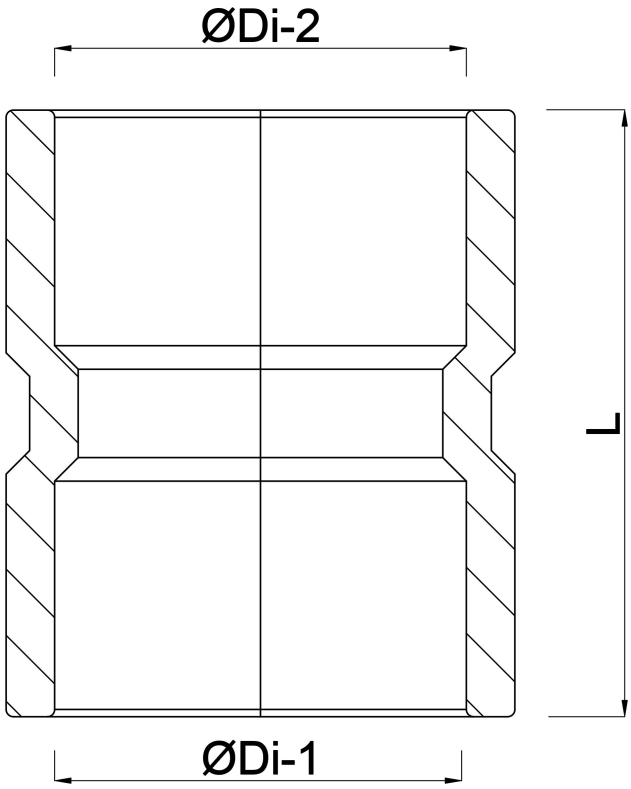

Last modified date: 01/11/2026

Bosta UK Ltd.
Reflection House
Olding Road
Bury St. Edmunds
Suffolk
IP33 3TA
T +44 (0) 1284 716580
E enquiries@bosta.co.uk
http://www.bosta.com