Profec Ball valve PVC-U 1/2" imperial glue socket 16bar grey type 2001 (0112061)



PROFEC

bosta
bringing water to life

TECHNICAL SPECIFICATIONS

Colour	grey
Type	2001
Material	PVC-U
Operation	lever
Colour lever	red
Handle material	PVC-U
Housing construction	3-part
Ball material	PVC-U
Material housing	PVC-U
Material seal	PE/EPDM
Connection	imperial glue socket
Temperature range	0°C - 60°C
Size	1/2"
WebshopURL	https://www.bosta.com/en-gb/profec-ball-valve-pvc-u-1-2-imperial-glue-socket-16bar-grey-type-2001-0112061
Pressure	16 bar

DIMENSIONS

Ct-1	52 mm
Lb	84 mm
R	53 mm
ØDf	26 mm
ØDi-1	1/2 "
ØDi-2	1/2 "

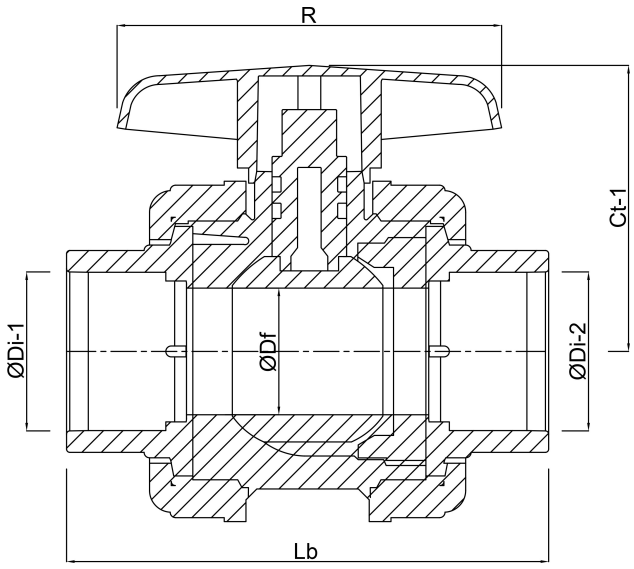

Last modified date: 31/10/2026

Bosta UK Ltd.
Reflection House
Olding Road
Bury St. Edmunds
Suffolk

bosta
bringing water to life

IP33 3TA
T +44 (0) 1284 716580
E enquiries@bosta.co.uk
http://www.bosta.com

bosta
bringing water to life