Rovatti Centrifugal pump cast iron DN65 x DN105 DIN flange green type T3-80A (7024359)

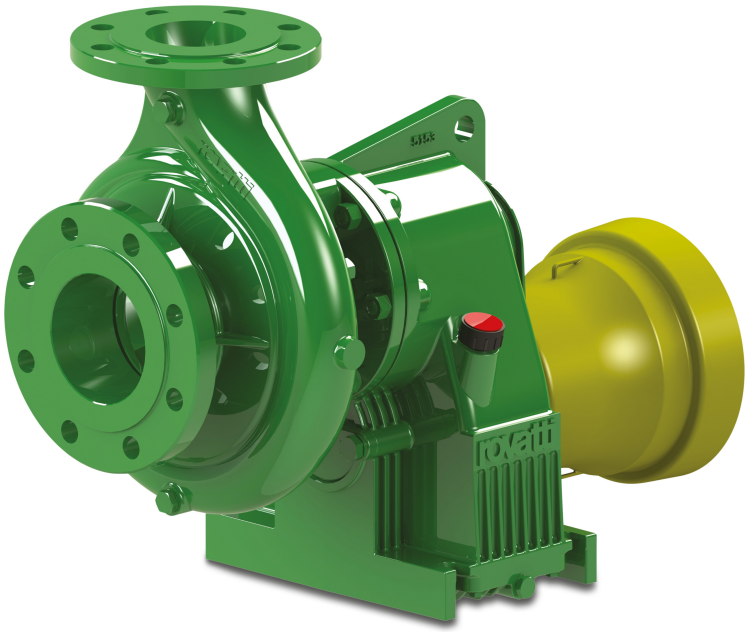

rovatti pompe

bosta
bringing water to life

TECHNICAL SPECIFICATIONS

Colour	green
Material	cast iron
Material impeller 1	cast iron
Connection	DIN flange
Max. temperature	60 °C
Type	T3-80A
Output Power	75 HP
Max. head	117 m
Size	DN65 x DN105
WebshopURL	https://www.bosta.com/en-gb/rovatti-centrifugal-pump-cast-iron-dn65-x-dn105-din-flange-green-type-t3-80a-7024359
Max flow rate	93 m^3/h
Press	65
Suction	80

DIMENSIONS

Cb-1	254 mm
Cr-1	105 mm
G-1	240 mm
H	504 mm
H-1	504 mm
L	506 mm
Mc	130 mm
Mr	365 mm
O	15 mm
W-1	270 mm
ØDi-1	80 mm
ØDi-2	65 mm

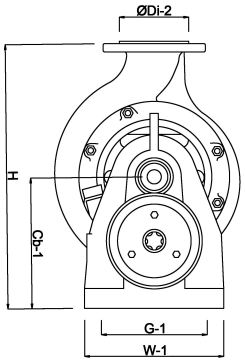

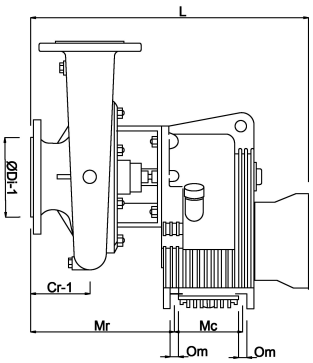

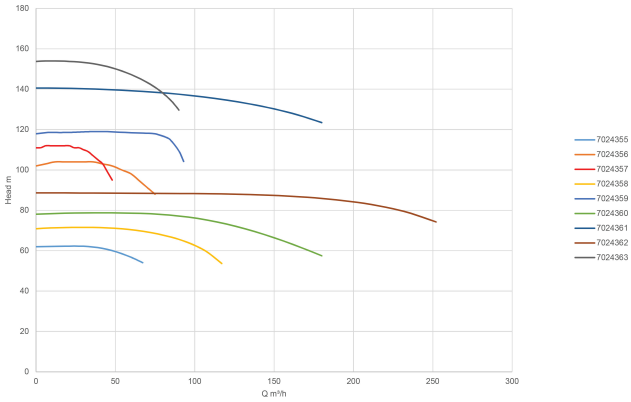

bosta
bringing water to life

PRODUCT INFORMATION

The tractor driven pumps type T come installed with the "E" impeller which provides the highest pressure. For different impeller types please consult with us.
For the T types, the Standard Gear Ratio (PTO) has been selected. For other Gear Ratios please consult with us. In order to choose the correct Gear Ratio with the highest effiency we recommend to have the tractor and torque information upfront.
All the T pumps come with a lattyflon stuffing-box packing which is ideal for dirty water installation. The stuffing-box packing needs to be adjusted accordingly with the Twinner System (2 parts) so it is always leaking in order to keep it lubricated and cool.
No counter flanges are delivered with the T types, for the counter flange kits please consult with us.
The T pumps can also be delivered fully assembled: frame (available in 2 sizes), suction pipe, pressure pipe, manometer, steel valve and hand pump. Please consult with us for more information.
Applications
Medium Pressure Sprinkler Systems: types T1-65A and T2-80.
Medium Pressure Frost Protection: types T3-100A and T4-125 (max 6 and 8 ha. respectively).
High Pressure Hose Rail Machines: types T2-50, T265, T3-80A, T3K80/2 and T4-110.

Last modified date: 27/11/2026

Bosta UK Ltd.
Reflection House
Olding Road
Bury St. Edmunds
Suffolk
IP33 3TA
T +44 (0) 1284 716580
E enquiries@bosta.co.uk
http://www.bosta.com