VDL Socket PVC-U 160 mm glue socket 16bar grey KIWA (7002915)



Van de Lande

bosta
bringing water to life

TECHNICAL SPECIFICATIONS

Colour	grey
Material	PVC-U
Approval	KIWA
Connection	glue socket
Size	160 mm
WebshopURL	https://www.bosta.com/en-gb/vdl-socket-pvc-u-160-mm-glue-socket-16bar-grey-kiwa-7002915
Pressure	16 bar

DIMENSIONS

L	180 mm
T	8 mm
ØDi-1	160 mm
ØDi-2	160 mm

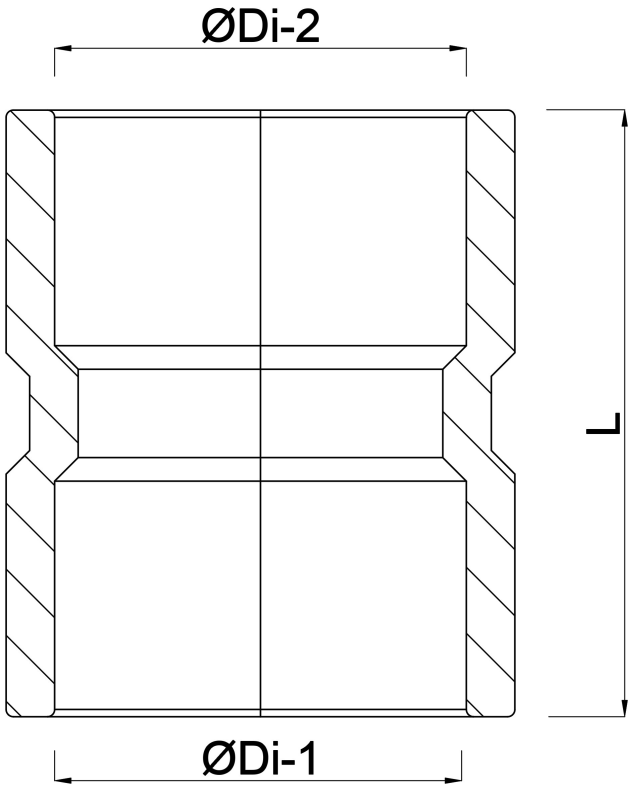

Last modified date: 01/11/2026

Bosta UK Ltd.
Reflection House
Olding Road
Bury St. Edmunds
Suffolk
IP33 3TA
T +44 (0) 1284 716580
E enquiries@bosta.co.uk
http://www.bosta.com