VDL Ball valve PVC-U 25 mm glue socket 16bar DN20 grey type EIL viton (7018368)



Van de Lande

bosta
bringing water to life

TECHNICAL SPECIFICATIONS

Colour	grey
Type	EIL viton
Material	PVC-U
Operation	lever
Colour lever	green
Handle material	PVC-U
Housing construction	2-part
Material housing	PVC-U
Material seal	viton
Connection	glue socket
Temperature range	0°C - 60°C
Pressure	16 bar
Size	25 mm
WebshopURL	https://www.bosta.com/en-gb/vdl-ball-valve-pvc-u-25-mm-glue-socket-16bar-dn20-grey-type-eil-viton-7018368
DN	20

DIMENSIONS

Ct-1	55 mm
Lb	87 mm
R	88 mm
ØDf	20 mm
ØDi-1	25 mm
ØDi-2	25 mm

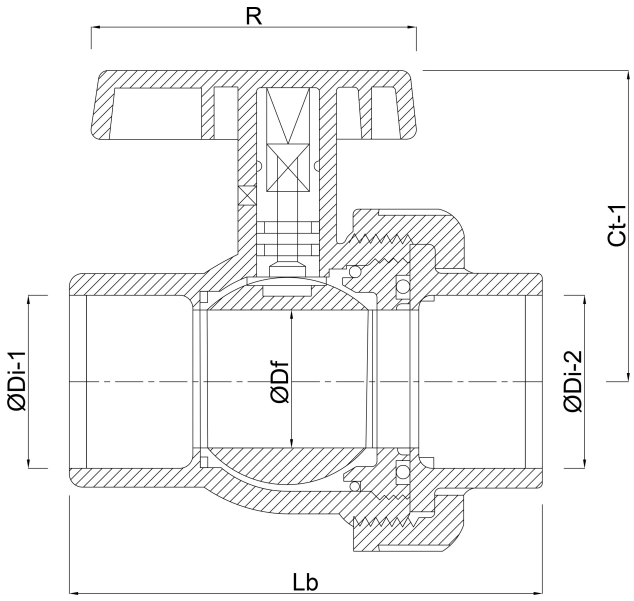

Last modified date: 01/11/2026

Bosta UK Ltd.
Reflection House
Olding Road
Bury St. Edmunds

Suffolk
IP33 3TA
T +44 (0) 1284 716580
E enquiries@bosta.co.uk
http://www.bosta.com

bosta
bringing water to life