VDL T-piece 45° PVC-U 125 mm glue socket 10bar grey (0100760)



Van de Lande

bosta
bringing water to life

TECHNICAL SPECIFICATIONS

Colour	grey
Material	PVC-U
Size	125 mm
Connection	glue socket
WebshopURL	https://www.bosta.com/en-gb/vdl-t-piece-45-pvc-u-125-mm-glue-socket-10bar-grey-0100760
Pressure	10 bar

DIMENSIONS

Cr-1	236 mm
Ct-1	236 mm
L	335 mm
P-1	69 mm
P-2	69 mm
P-3	69 mm
ØDi-1	125 mm
ØDi-2	125 mm

ØDi-3	125 mm
ß	45 °

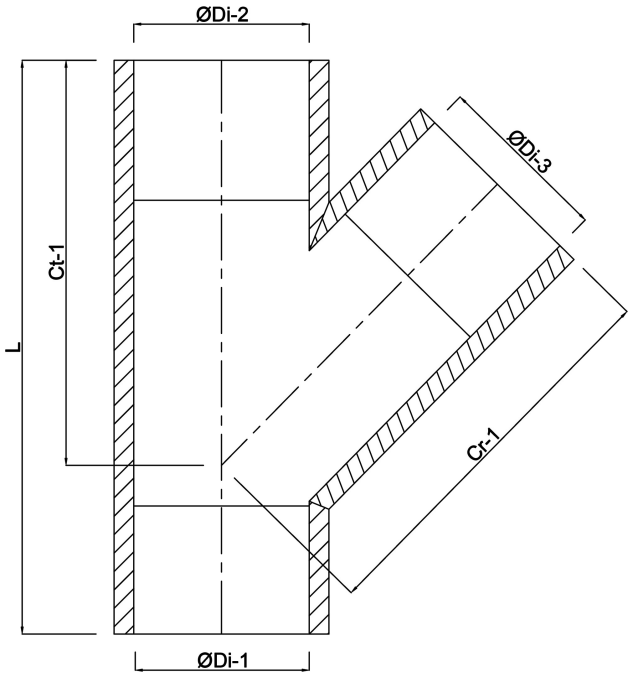

Last modified date: 01/11/2026

Bosta UK Ltd.
Reflection House
Olding Road
Bury St. Edmunds
Suffolk
IP33 3TA
T +44 (0) 1284 716580
E enquiries@bosta.co.uk
http://www.bosta.com