DAB Pressure set technopolymer 1 1/4" female thread 12bar 4,4A 400VAC black/green type ESYBOX MAX 60/120T 380-480 (7038003)



DAB
MAKING WATER EASY

bosta
bringing water to life

TECHNICAL SPECIFICATIONS

Colour	black/green
Material	technopolymer
Pump body	technopolymer
Material impeller 1	technopolymer
Max. head	80 m
Connection	female thread
Max. temperature	50 °C
Minimum medium temperature (continuous)	0 °C
Height	613 mm
Max flow rate	17.4 m^3/h
Maximum ambient temperature	55 °C
Pressure	12 bar
Packaging dimensions L/W/H	400 x 380 x 800 mm
Type	ESYBOX MAX 60/120T 380-480
Size	1 1/4"
WebshopURL	https://www.bosta.com/en-gb/dab-pressure-set-technopolymer-1-1-4-female-thread-12bar-4-4a-400vac-

black-green-type-esybox-max-60-120t-380-480-7038003

Voltage	400VAC
Weight	29 kg
Power	2.65 kW
Impellers	3
Ampere	4,4 A

DIMENSIONS

Cb-1	87 mm
Cc-1	124.5 mm
Cl-1	131.8 mm
Cr-1	127.7 mm
H	384 mm
H-1	384 mm
L	766 mm
Lb	228 mm
Lb-2	613 mm
Length	384 mm
W-1	375 mm

Width	375 mm
ØDi-1	1 1/4 - 2 "
ØDi-2	1 1/4 - 2 "

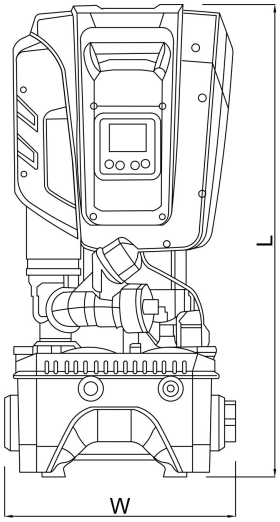

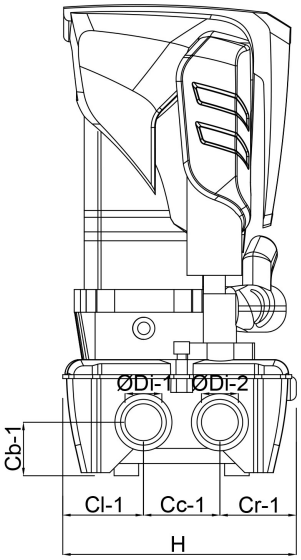

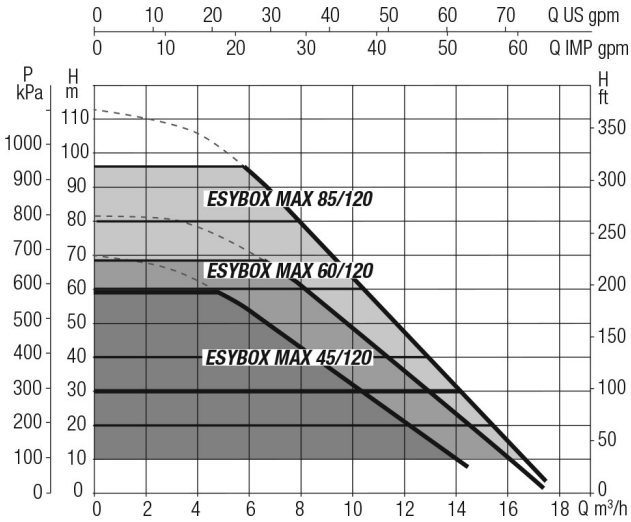

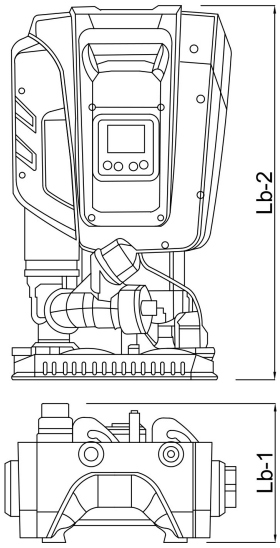

PRODUCT INFORMATION

Includes a self-priming multi-stage pump, management inverter electronics, pressure and flow sensors, adjustable high resolution LCD display with 2 litre built-in expansion vessel, and cartridge check valve.

- Pressure set point adjustable from 1 to 12 bar
- Max. inlet pressure: 5 bar
- Installation: fixed vertical position, a 4 pump modular system is available with the additional kit to connect the ESYDOCKS.
- Docking station not included and is required for operation.

Last modified date: 02/11/2026

Bosta UK Ltd.
Reflection House
Olding Road
Bury St. Edmunds
Suffolk
IP33 3TA
T +44 (0) 1284 716580
E enquiries@bosta.co.uk
http://www.bosta.com

bosta
bringing water to life