Profec Nr. 23B Welding nipple stainless steel 316 1" male thread x butt welding 8bar 40 mm (0080747)



PROFEC

bosta
bringing water to life

TECHNICAL SPECIFICATIONS

Material	stainless steel 316
Connection	male thread x butt welding
Fitting nr.	Nr. 23B
Pressure	8 bar
Size	1"
WebshopURL	https://www.bosta.com/en-gb/profec-nr.-23b-welding-nipple-stainless-steel-316-1-male-thread-x-butt-welding-8bar-40-mm-0080747
Length	40 mm

DIMENSIONS

L	40 mm
ØDo-1	33.4 mm
ØDo-2	1 "

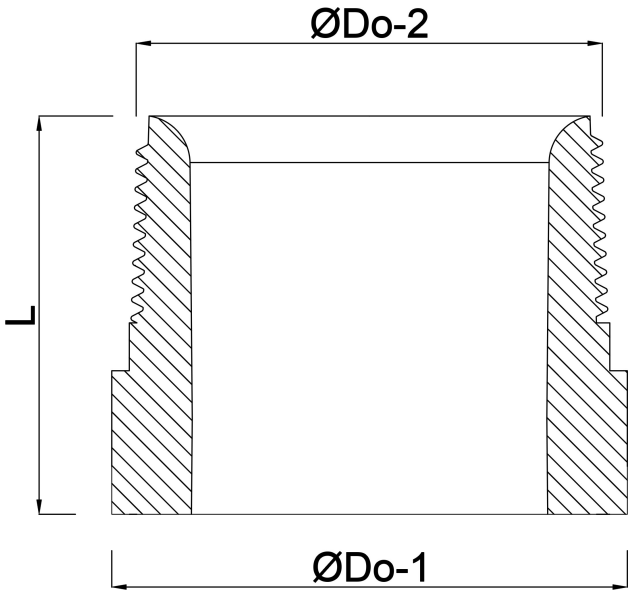

Last modified date: 30/10/2026

Bosta UK Ltd.
Reflection House
Olding Road
Bury St. Edmunds
Suffolk
IP33 3TA
T +44 (0) 1284 716580
E enquiries@bosta.co.uk
http://www.bosta.com

bosta
bringing water to life