3-way ball valve T-bore PVC-U 20 mm glue socket 10bar DN15 grey type T-bore side connection (0111519)



bosta
bringing water to life

TECHNICAL SPECIFICATIONS

Colour	grey
Type	T-bore
Material	PVC-U
Operation	lever
Colour lever	red
Handle material	PVC-U
Material housing	PVC-U
Material seal	PTFE/EPDM
Ball bore	T-bore
Connection type	side connection
Connection	glue socket
Temperature range	0°C - 60°C
Pressure	10 bar
Shaft	PVC-U
Size	20 mm
WebshopURL	https://www.bosta.com/en-gb/3-way-ball-valve-t-bore-pvc-u-20-mm-glue-socket-10bar-dn15-grey-type-t-bore-side-connection-0111519

DN	15

DIMENSIONS

Ct-1	57 mm
Lb	112 mm
R	85 mm
ØDf	15 mm
ØDi-1	20 mm
ØDi-2	20 mm

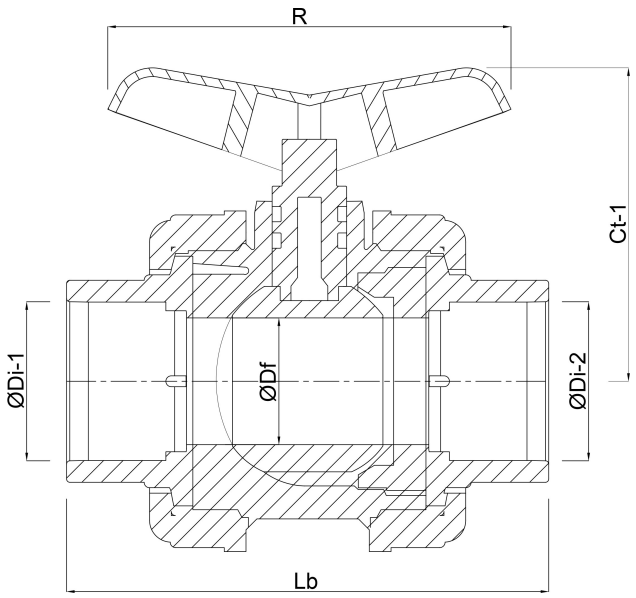

Last modified date: 30/10/2026

Bosta UK Ltd.
Reflection House

Olding Road
Bury St. Edmunds
Suffolk
IP33 3TA
T +44 (0) 1284 716580
E enquiries@bosta.co.uk
http://www.bosta.com

bosta
bringing water to life