Profec Ball valve brass nickel plated 1 1/4" female thread x male thread 25bar type 104 (0403020)

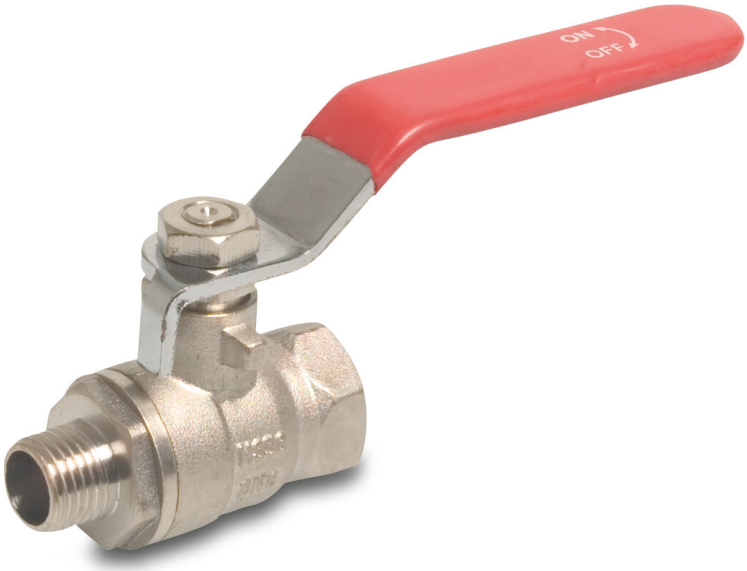

PROFEC

bosta
bringing water to life

TECHNICAL SPECIFICATIONS

Type	104
Material	brass
Surface treatment	nickel plated
Operation	lever
Colour lever	red
Handle material	steel
Ball material	hard chrome plated brass
Material housing	brass
Material seal	PTFE
Connection	female thread x male thread
Temperature range	-20°C - 120°C
Pressure	25 bar
Size	1 1/4"
WebshopURL	https://www.bosta.com/en-gb/profec-ball-valve-brass-nickel-plated-1-1-4-female-thread-x-male-thread-25bar-type-104-0403020

DIMENSIONS

Ct-1	74.8 mm
F-1	16 mm
F-2	16 mm
Lb	83,4 mm
R	126.3 mm
ØDf	30 mm
ØDi-2	1 1/4 "
ØDo-1	1 1/4 "

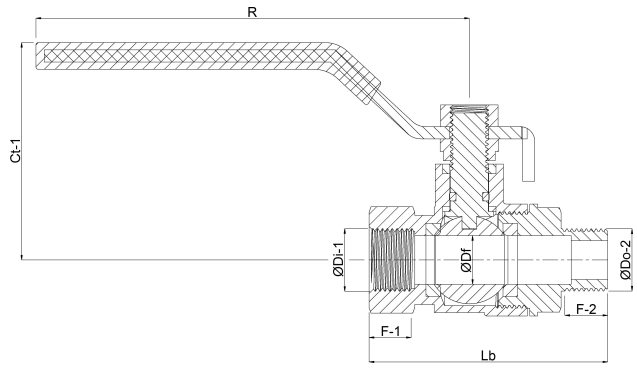

Last modified date: 31/10/2026

Bosta UK Ltd.
Reflection House
Olding Road
Bury St. Edmunds
Suffolk

bosta
bringing water to life

IP33 3TA
T +44 (0) 1284 716580
E enquiries@bosta.co.uk
http://www.bosta.com

bosta
bringing water to life