Profec Reducing bush PVC-U 315 mm x 225 mm glue spigot x glue socket 10bar grey (0100294)

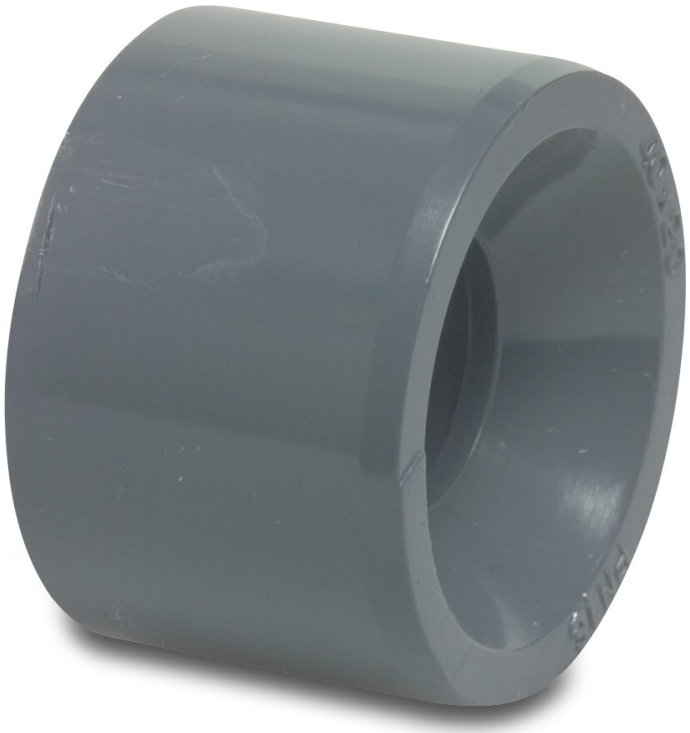

PROFEC

bosta
bringing water to life

TECHNICAL SPECIFICATIONS

Colour	grey
Material	PVC-U
Connection	glue spigot x glue socket
Size	315 mm x 225 mm
WebshopURL	https://www.bosta.com/en-gb/profec-reducing-bush-pvc-u-315-mm-x-225-mm-glue-spigot-x-glue-socket-10bar-grey-0100294
Pressure	10 bar

DIMENSIONS

L	163.5 mm
Lb	118,5 mm
ØDi-2	225 mm
ØDo-1	315 mm

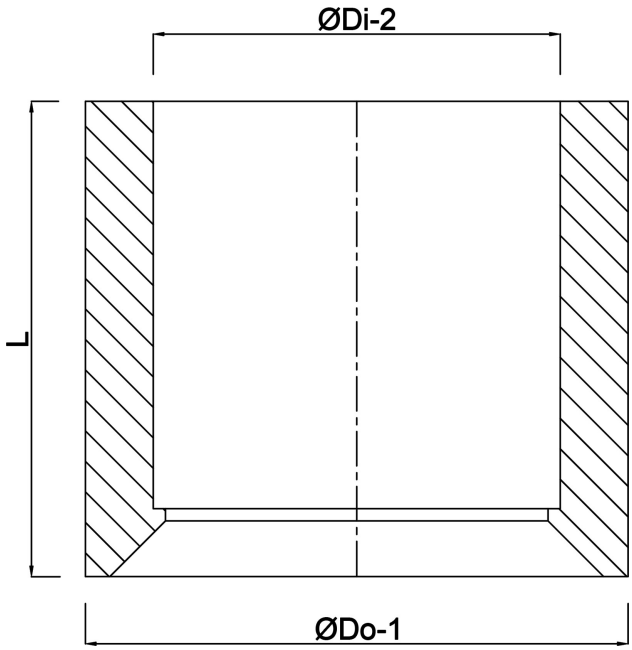

Last modified date: 01/11/2026

Bosta UK Ltd.
Reflection House
Olding Road
Bury St. Edmunds
Suffolk
IP33 3TA
T +44 (0) 1284 716580
E enquiries@bosta.co.uk
http://www.bosta.com

bosta
bringing water to life