Profec Swing check valve with lifting device ductile iron (GGG40) epoxy coating DN100 DIN flange 16bar DN100 blue PN10/16 (0402637)



PROFEC

bosta
bringing water to life

TECHNICAL SPECIFICATIONS

Colour	blue
Material	ductile iron (GGG40)
Surface treatment	epoxy coating
Material cover	ductile iron
Material housing	ductile iron (GGG40)
Material seal	NBR
Connection	DIN flange
Gasket	NBR
Temperature range	0°C - 80°C
Pressure	16 bar
Capacity	170 m^3/h
Size	DN100
WebshopURL	https://www.bosta.com/en-gb/profec-swing-check-valve-with-lifting-device-ductile-iron-ggg40-epoxy-coating-dn100-din-flange-16bar-dn100-blue-pn10-16-0402637
Length	300 mm
DN	100
Flange	PN10/16

Outer ø	220 mm
PCD	180 mm
Holes	8

DIMENSIONS

Ct-1	110 mm
L	300 mm
PCD	180 mm

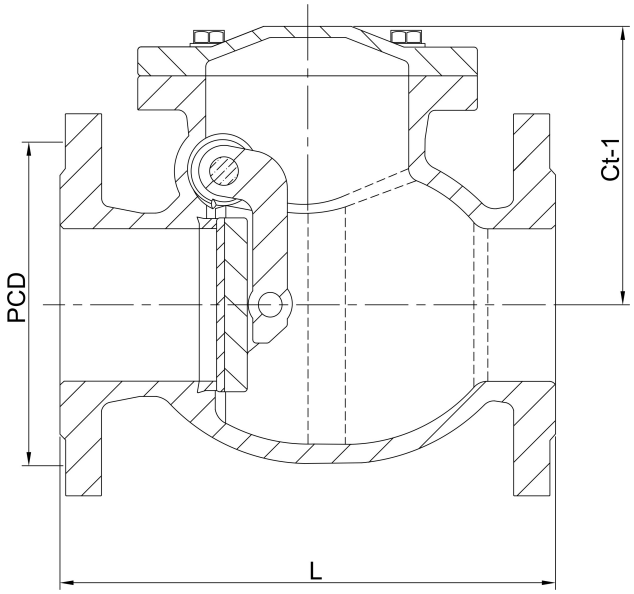

Last modified date: 31/10/2026

Bosta UK Ltd.
Reflection House
Olding Road
Bury St. Edmunds

bosta
bringing water to life

Suffolk
IP33 3TA
T +44 (0) 1284 716580
E enquiries@bosta.co.uk
http://www.bosta.com

bosta
bringing water to life