Profec Non return valve ductile iron (GGG40) epoxy coating DN50 DIN flange 10bar DN50 blue PN10/16 (0401928)



PROFEC

bosta
bringing water to life

TECHNICAL SPECIFICATIONS

Colour	blue
Material	ductile iron (GGG40)
Surface treatment	epoxy coating
Material cover	cast iron GG 40
Material housing	ductile iron (GGG40)
Material seal	NBR
Connection	DIN flange
Gasket	NBR
DIN Standard	DIN 2501
Temperature range	-20°C - 100°C
RAL number	RAL5017
Opening pressure	1 bar
Pressure	10 bar
Ball material	carbon/NBR
Size	DN50
WebshopURL	https://www.bosta.com/en-gb/profec-non-return-valve-ductile-iron-ggg40-epoxy-coating-dn50-din-flange-10bar-dn50-blue-pn10-16-0401928

Length	200 mm
DN	50
Flange	PN10/16
Outer ø	165 mm
Holes	4

DIMENSIONS

Construction length	din 3202 f6
Ct-1	108 mm
Install. length	din 3202 f6
L	200 mm
PCD	125 mm

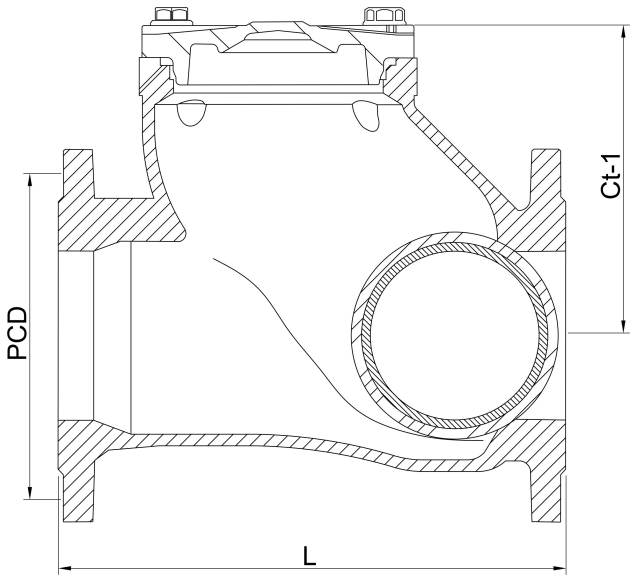

Last modified date: 31/10/2026

Bosta UK Ltd.
Reflection House
Olding Road
Bury St. Edmunds
Suffolk
IP33 3TA
T +44 (0) 1284 716580
E enquiries@bosta.co.uk
http://www.bosta.com

bosta
bringing water to life