Profec Nr. 960 Reducer bush brass 1/2" x 1/4" male thread x female thread 40bar (0708933)



PROFEC

bosta
bringing water to life

TECHNICAL SPECIFICATIONS

Material	brass
Connection	male thread x female thread
Fitting nr.	Nr. 960
Pressure	40 bar
Size	1/2" x 1/4"
WebshopURL	https://www.bosta.com/en-gb/profec-nr.-960-reducer-bush-brass-1-2-x-1-4-male-thread-x-female-thread-40bar-0708933

DIMENSIONS

L	28 mm
ØDi-1	1/4 "
ØDo-2	1/2 "

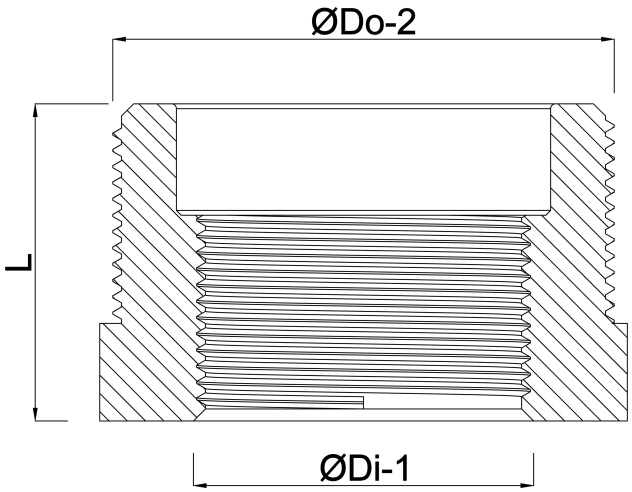

Last modified date: 31/10/2026

Bosta UK Ltd.
Reflection House
Olding Road
Bury St. Edmunds
Suffolk
IP33 3TA
T +44 (0) 1284 716580
E enquiries@bosta.co.uk
http://www.bosta.com

bosta
bringing water to life