VDL T-piece 45° PVC-U 25 mm glue socket 16bar grey (7002561)



Van de Lande

bosta
bringing water to life

TECHNICAL SPECIFICATIONS

Colour	grey
Material	PVC-U
Size	25 mm
Connection	glue socket
WebshopURL	https://www.bosta.com/en-gb/vdl-t-piece-45-pvc-u-25-mm-glue-socket-16bar-grey-7002561
Pressure	16 bar

DIMENSIONS

Cr-1	54.5 mm
Ct-1	54.5 mm
L	81 mm
P-1	19 mm
P-2	19 mm
P-3	19 mm
ØDi-1	25 mm
ØDi-2	25 mm

ØDi-3	25 mm
ß	45 °

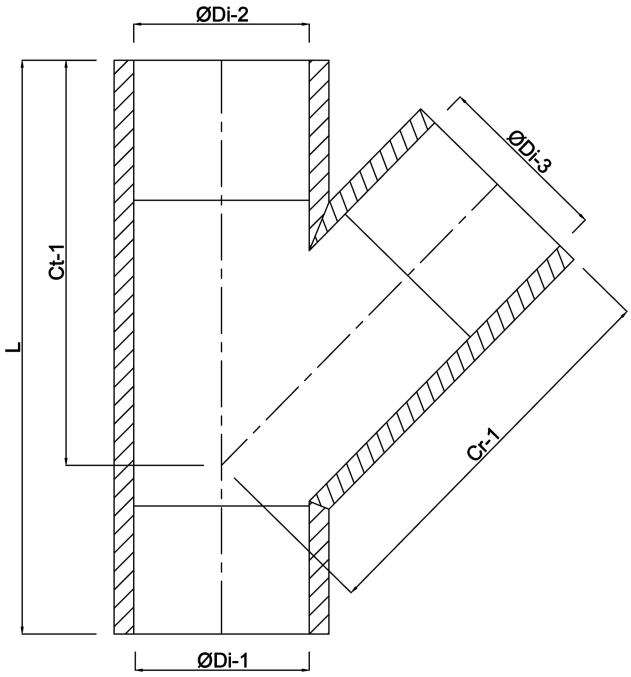

Last modified date: 01/11/2026

Bosta UK Ltd.
Reflection House
Olding Road
Bury St. Edmunds
Suffolk
IP33 3TA
T +44 (0) 1284 716580
E enquiries@bosta.co.uk
http://www.bosta.com