VDL T-piece 45° PVC-U 90 mm glue socket 10bar grey (0110277)



Van de Lande

bosta
bringing water to life

TECHNICAL SPECIFICATIONS

Colour	grey
Material	PVC-U
Size	90 mm
Connection	glue socket
WebshopURL	https://www.bosta.com/en-gb/vdl-t-piece-45-pvc-u-90-mm-glue-socket-10bar-grey-0110277
Pressure	10 bar

DIMENSIONS

Cr-1	172 mm
Ct-1	172 mm
L	243 mm
P-1	51 mm
P-2	51 mm
P-3	51 mm
ØDi-1	90 mm
ØDi-2	90 mm

ØDi-3	90 mm
ß	45 °

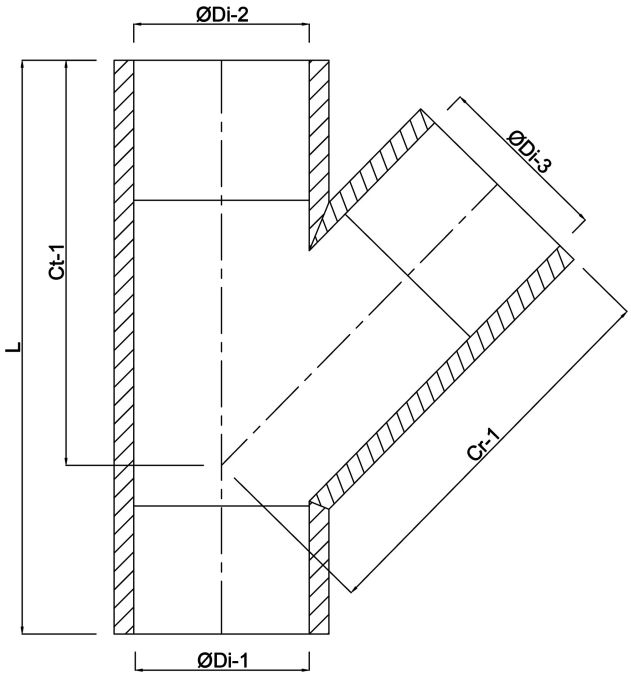

Last modified date: 01/11/2026

Bosta UK Ltd.
Reflection House
Olding Road
Bury St. Edmunds
Suffolk
IP33 3TA
T +44 (0) 1284 716580
E enquiries@bosta.co.uk
http://www.bosta.com