VDL Ball valve PVC-U 32 mm glue socket 16bar grey type DIL viton (7018379)



Van de Lande

bosta
bringing water to life

TECHNICAL SPECIFICATIONS

Colour	grey
Type	DIL viton
Material	PVC-U
Operation	lever
Colour lever	green
Handle material	PVC-U
Housing construction	3-part
Material seal	viton
Connection	glue socket
Temperature range	0°C - 60°C
Size	32 mm
WebshopURL	https://www.bosta.com/en-gb/vdl-ball-valve-pvc-u-32-mm-glue-socket-16bar-grey-type-dil-viton-7018379
Pressure	16 bar

DIMENSIONS

Ct-1	66 mm

Lb	108 mm
R	94 mm
ØDf	25 mm
ØDi-1	32 mm
ØDi-2	32 mm

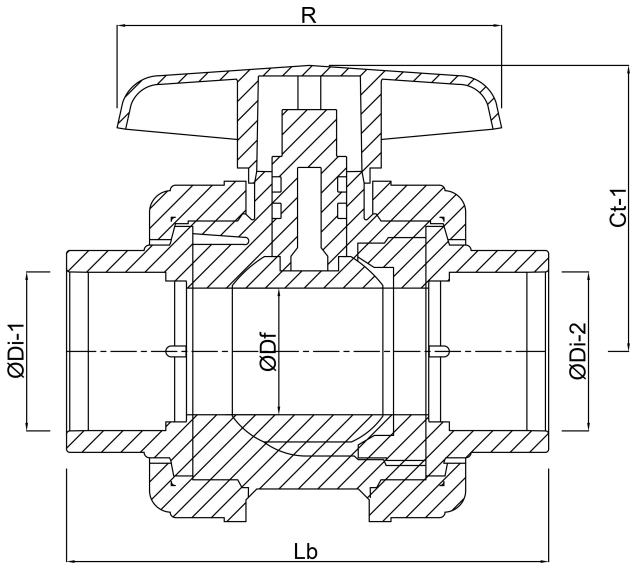

Last modified date: 01/11/2026

Bosta UK Ltd.
Reflection House
Olding Road
Bury St. Edmunds
Suffolk
IP33 3TA
T +44 (0) 1284 716580
E enquiries@bosta.co.uk
http://www.bosta.com