# Profec 3-piece ball valve stainless steel 316 3/8" female thread 69bar (0090952)

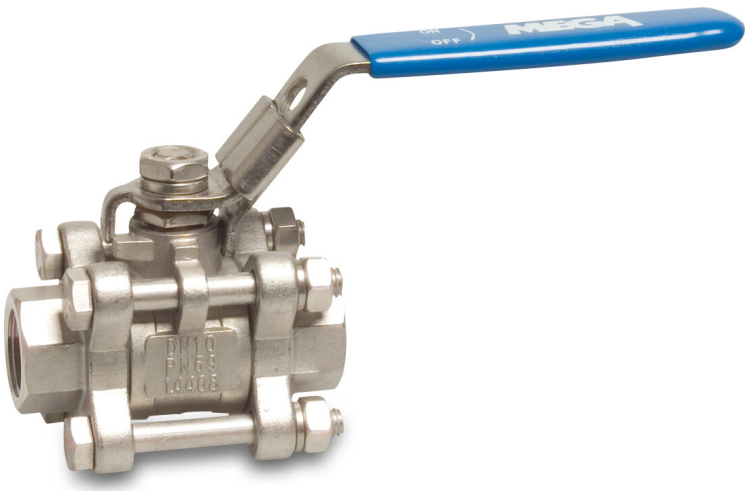


PROFEC

bosta
bringing water to life

# TECHNICAL SPECIFICATIONS

| | |
|---|---|
| Material | stainless steel 316 |
| Operation | lever |
| Colour lever | blue |
| Handle material | stainless steel |
| Material housing | stainless steel 316 |
| Material seal | PTFE |
| Connection | female thread |
| Temperature range | -10°C - 150°C |
| Pressure | 69 bar |
| Size | 3/8" |
| WebshopURL | https://www.bosta.com/en-gb/profec-3-piece-ball-valve-stainless-steel-316-3-8-female-thread-69bar-0090952 |

# DIMENSIONS

| | |
|---|---|
| Ct-1 | 45 mm |
| F-1 | 12 mm |
| F-2 | 12 mm |

| | |
|---|---|
| Lb | 51 mm |
| R | 100 mm |
| ØDf | 12.5 mm |
| ØDi-1 | 3/8 " |
| ØDi-2 | 3/8 " |

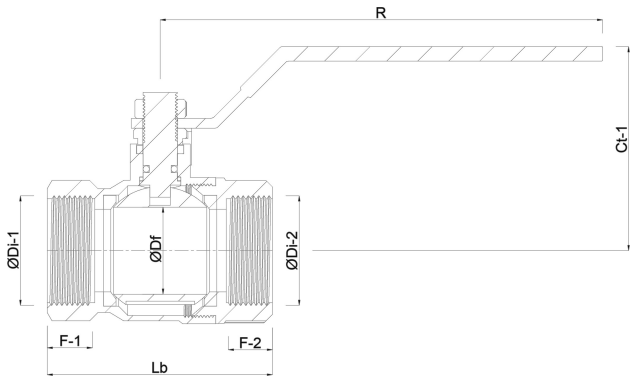


# PRODUCT INFORMATION

Full flow.

## Last modified date: 30/10/2026

Bosta UK Ltd.
Reflection House
Olding Road
Bury St. Edmunds
Suffolk
IP33 3TA
T +44 (0) 1284 716580
E enquiries@bosta.co.uk
http://www.bosta.com