Profec Ball valve PVC-U 2" imperial glue socket 10bar white type Imperial 2000 (0169997)



PROFEC

bosta
bringing water to life

TECHNICAL SPECIFICATIONS

Colour	white
Type	Imperial 2000
Material	PVC-U
Operation	lever
Colour lever	red
Handle material	PVC-U
Housing construction	3-part
Ball material	PVC-U
Material housing	PVC-U
Material seal	PE/EPDM
Connection	imperial glue socket
Max. temperature	60 °C
Minimum medium temperature (continuous)	0 °C
Pressure	10 bar
Size	2"
WebshopURL	https://www.bosta.com/en-gb/profec-ball-valve-pvc-u-2-imperial-glue-socket-10bar-white-type-imperial-2000-

0169997

DIMENSIONS

Ct-1	99 mm
Lb	192 mm
R	157 mm
ØDf	50 mm
ØDi-1	2 "
ØDi-2	2 "

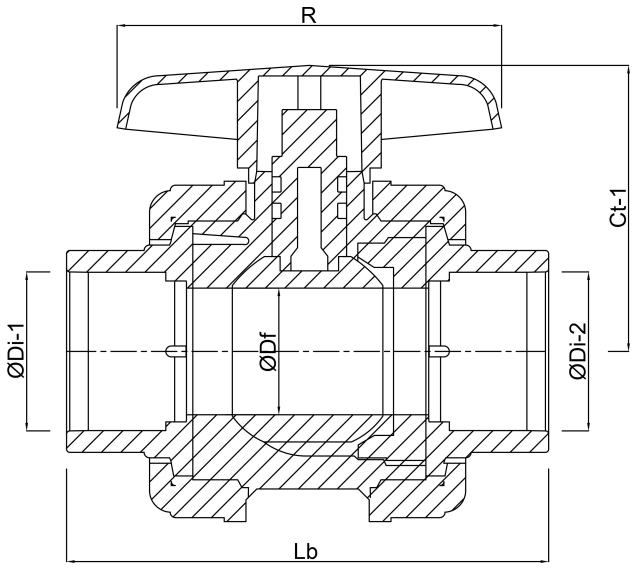

Last modified date: 31/10/2026

Bosta UK Ltd.
Reflection House
Olding Road

bosta
bringing water to life

Bury St. Edmunds
Suffolk
IP33 3TA
T +44 (0) 1284 716580
E enquiries@bosta.co.uk
http://www.bosta.com

bosta
bringing water to life