Ball valve PVC-U 63 mm glue socket 16bar DN50 grey type AK (0161505)



bosta
bringing water to life

TECHNICAL SPECIFICATIONS

Colour	grey
Type	AK
Material	PVC-U
Operation	lever
Colour lever	red
Handle material	PVC-U
Housing construction	3-part
Material housing	PVC-U
Material seal	PE/EPDM
Connection	glue socket
Max. temperature	60 °C
Minimum medium temperature (continuous)	0 °C
Size	63 mm
WebshopURL	https://www.bosta.com/en-gb/ball-valve-pvc-u-63-mm-glue-socket-16bar-dn50-grey-type-ak-0161505
DN	50
Pressure	16 bar

DIMENSIONS

Ct-1	111 mm
Lb	168 mm
R	74 mm
ØDf	50 mm
ØDi-1	63 mm
ØDi-2	63 mm

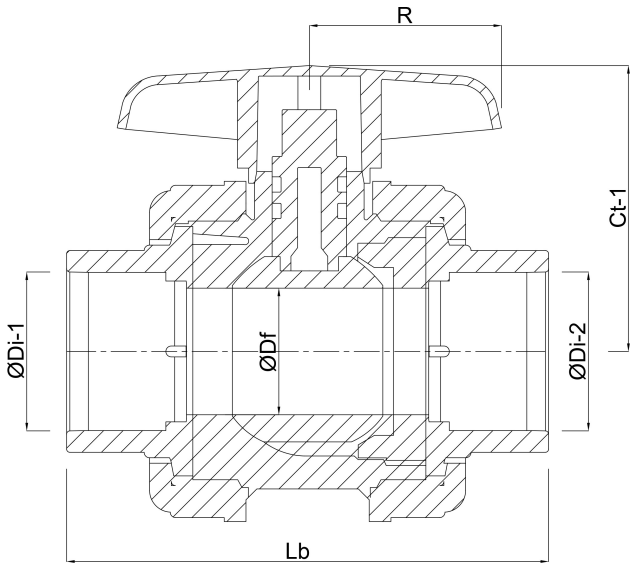

Last modified date: 31/10/2026

Bosta UK Ltd.
Reflection House
Olding Road
Bury St. Edmunds
Suffolk

IP33 3TA
T +44 (0) 1284 716580
E enquiries@bosta.co.uk
http://www.bosta.com

bosta
bringing water to life