Backing ring PP/steel PP 400 mm SDR11 16bar DN400 black PN10 (7031735)



bosta
bringing water to life

TECHNICAL SPECIFICATIONS

Colour	black
Material	PP/steel
Surface treatment	PP
Class	SDR11
Pressure	16 bar
Size	400 mm
WebshopURL	https://www.bosta.com/en-gb/backing-ring-pp-steel-pp-400-mm-sdr11-16bar-dn400-black-pn10-7031735
DN	400
Flange	PN10
Outer ø	574 mm
Weight	17.74 kg
Thickness	46 mm
Bolt hole	26 mm
Holes	16

DIMENSIONS

O	26 mm
PCD	515 mm
ØDi-1	430 mm

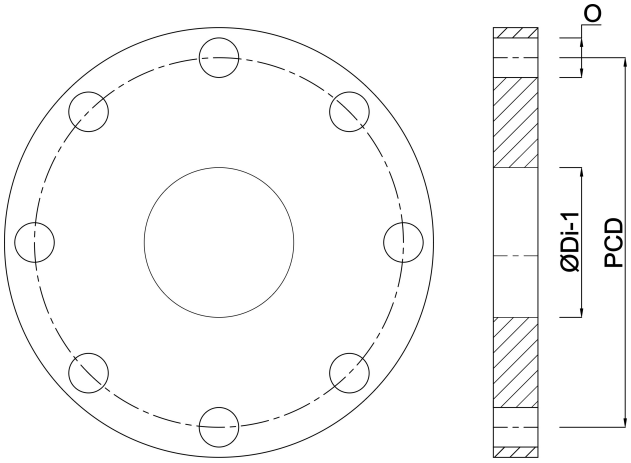

Last modified date: 30/10/2026

Bosta UK Ltd.
Reflection House
Olding Road
Bury St. Edmunds
Suffolk
IP33 3TA
T +44 (0) 1284 716580
E enquiries@bosta.co.uk
http://www.bosta.com