Profec Ball valve PVC-U 50 mm glue socket 16bar DN40 grey type 2000 (0111380)



PROFEC

bosta
bringing water to life

TECHNICAL SPECIFICATIONS

Colour	grey
Type	2000
Material	PVC-U
Operation	lever
Colour lever	red
Handle material	PVC-U
Housing construction	3-part
Material housing	PVC-U
Material seal	PE/EPDM
Connection	glue socket
Temperature range	10°C - 60°C
Size	50 mm
WebshopURL	https://www.bosta.com/en-gb/profec-ball-valve-pvc-u-50-mm-glue-socket-16bar-dn40-grey-type-2000-0111380
DN	40
Pressure	16 bar

DIMENSIONS

Ct-1	96.5 mm
Lb	167 mm
R	134 mm
ØDf	40 mm
ØDi-1	50 mm
ØDi-2	50 mm

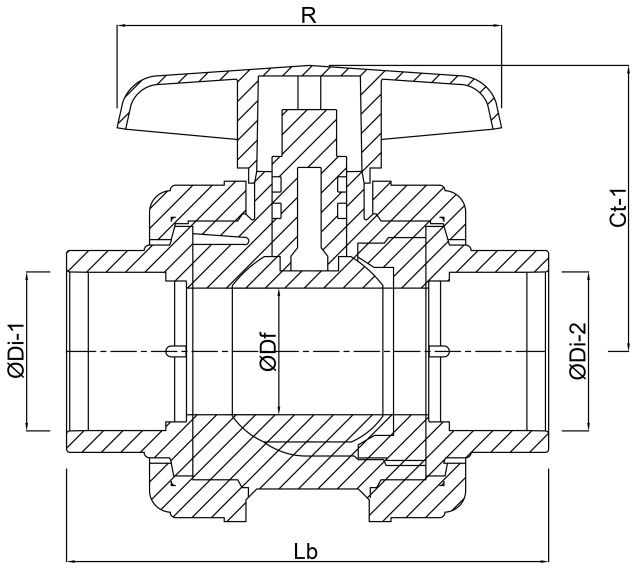

Last modified date: 30/10/2026

Bosta UK Ltd.
Reflection House
Olding Road
Bury St. Edmunds
Suffolk

IP33 3TA
T +44 (0) 1284 716580
E enquiries@bosta.co.uk
http://www.bosta.com

bosta
bringing water to life