Ball valve PVC-U 32 mm glue socket 10bar DN25 grey type 2000 Teflon (0111908)



bosta
bringing water to life

TECHNICAL SPECIFICATIONS

Colour	grey
Type	2000 Teflon
Material	PVC-U
Operation	lever
Colour lever	red
Handle material	PVC-U
Housing construction	3-part
Material housing	PVC-U
Material seal	PTFE/EPDM
Connection	glue socket
Temperature range	0°C - 60°C
Pressure	10 bar
Size	32 mm
WebshopURL	https://www.bosta.com/en-gb/ball-valve-pvc-u-32-mm-glue-socket-10bar-dn25-grey-type-2000-teflon-0111908
Length	124 mm
DN	25

DIMENSIONS

Ct-1	72.5 mm
Lb	124 mm
R	99 mm
ØDf	25 mm
ØDi-1	32 mm
ØDi-2	32 mm

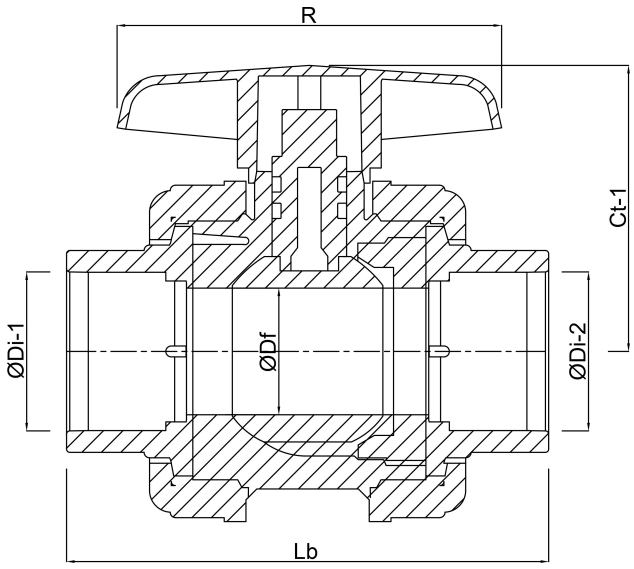

Last modified date: 31/10/2026

Bosta UK Ltd.
Reflection House
Olding Road
Bury St. Edmunds
Suffolk

IP33 3TA
T +44 (0) 1284 716580
E enquiries@bosta.co.uk
http://www.bosta.com

bosta
bringing water to life