Profec Backing ring PVC-U 250 mm 10bar DN225 grey PN10 (0110931)



PROFEC

bosta
bringing water to life

TECHNICAL SPECIFICATIONS

Colour	grey
Material	PVC-U
Suitable for	0110911
Suitable for	
Size	250 mm
Bolt	M40x140
Packaging	10 pcs
WebshopURL	https://www.bosta.com/en-gb/profec-backing-ring-pvc-u-250-mm-10bar-dn225-grey-pn10-0110931
DN	225
Inner ø	278 mm
Flange	PN10
Outer ø	395 mm
Weight	2.07 kg
Thickness	36 mm
Pressure	10 bar
Bolt hole	22 mm

Holes	12

DIMENSIONS

Db	395 mm
O	22 mm
PCD	350 mm
ØDi-1	278 mm

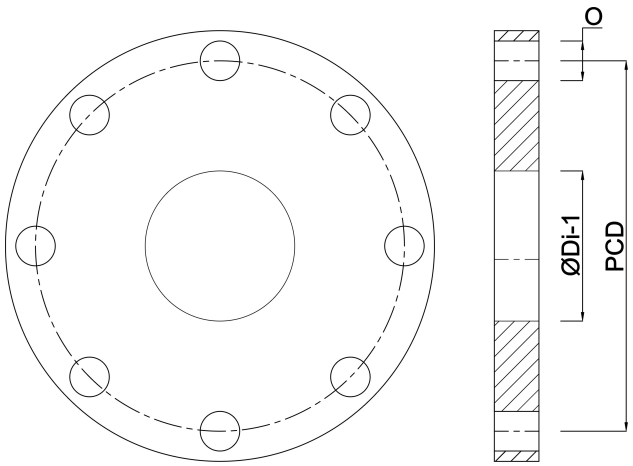

Last modified date: 30/10/2026

Bosta UK Ltd.
Reflection House
Olding Road
Bury St. Edmunds
Suffolk
IP33 3TA
T +44 (0) 1284 716580
E enquiries@bosta.co.uk
http://www.bosta.com