Profec Ball valve PVC-U 25 mm glue socket 16bar DN20 grey type Safe 600 Viton (0112135)



PROFEC

bosta
bringing water to life

TECHNICAL SPECIFICATIONS

Colour	grey
Type	Safe 600 Viton
Material	PVC-U
Operation	lever
Colour lever	red
Handle material	PVC-U
Housing construction	3-part
Material housing	PVC-U
Material seal	PTFE/viton
Connection	glue socket
Max. temperature	60 °C
Minimum medium temperature (continuous)	0 °C
Pressure	16 bar
Size	25 mm
WebshopURL	https://www.bosta.com/en-gb/profec-ball-valve-pvc-u-25-mm-glue-socket-16bar-dn20-grey-type-safe-600-viton-0112135

DN	20

DIMENSIONS

Ct-1	71 mm
Lb	112 mm
R	54 mm
ØDf	25 mm
ØDi-1	25 mm
ØDi-2	25 mm

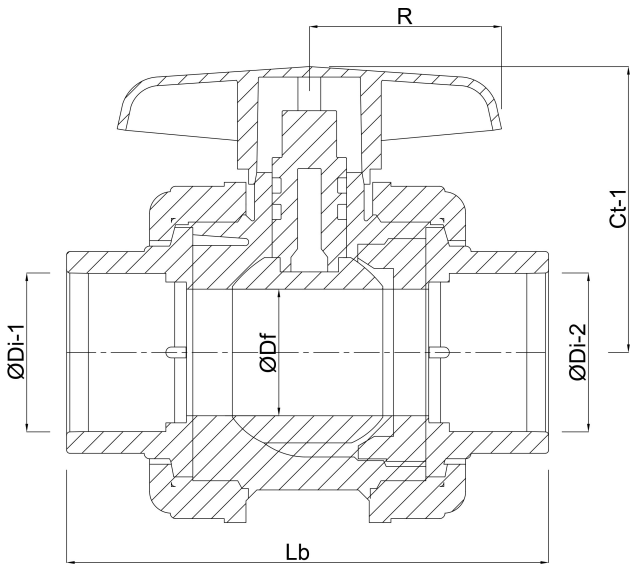

PRODUCT INFORMATION

With secure ball.

Last modified date: 31/10/2026

Bosta UK Ltd.
Reflection House
Olding Road
Bury St. Edmunds
Suffolk
IP33 3TA
T +44 (0) 1284 716580
E enquiries@bosta.co.uk
http://www.bosta.com

bosta
bringing water to life