Profec Adaptor elbow 90° PVC-U 50 mm x 1 1/2" glue socket x female thread 16bar grey with stainless steel ring type reinforced (0110171)



PROFEC

bosta
bringing water to life

TECHNICAL SPECIFICATIONS

Colour	grey
Type	reinforced
Material	PVC-U
Feature	with stainless steel ring
Connection	glue socket x female thread
Pressure	16 bar
Size	50 mm x 1 1/2"
WebshopURL	https://www.bosta.com/en-gb/profec-adaptor-elbow-90-pvc-u-50-mm-x-1-1-2-glue-socket-x-female-thread-16bar-grey-with-stainless-steel-ring-type-reinforced-0110171

DIMENSIONS

Cb-1	50 mm
Cb-2	50 mm
ØDi-1	50 mm
ØDi-2	1 1/2 "
ß	90 °

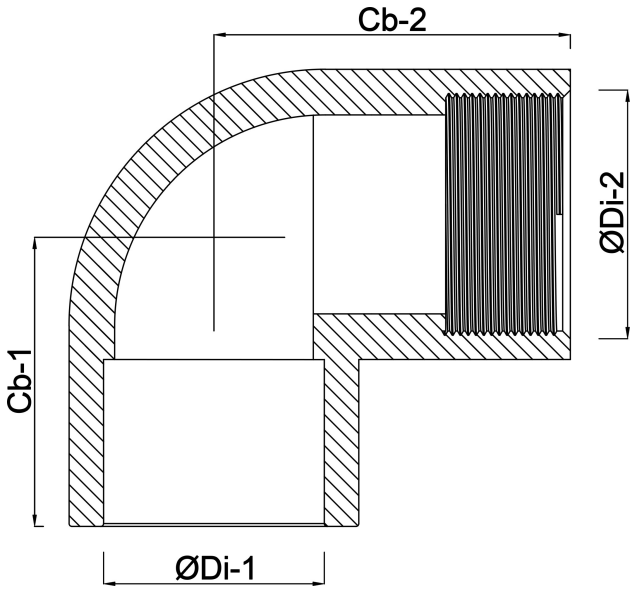

Last modified date: 30/10/2026

Bosta UK Ltd.
Reflection House
Olding Road
Bury St. Edmunds
Suffolk
IP33 3TA
T +44 (0) 1284 716580
E enquiries@bosta.co.uk
http://www.bosta.com

bosta
bringing water to life