VDL T-piece 45° PVC-U 160 mm glue socket 10bar grey (7002566)



Van de Lande

bosta
bringing water to life

TECHNICAL SPECIFICATIONS

Colour	grey
Material	PVC-U
Size	160 mm
Connection	glue socket
WebshopURL	https://www.bosta.com/en-gb/vdl-t-piece-45-pvc-u-160-mm-glue-socket-10bar-grey-7002566
Pressure	10 bar

DIMENSIONS

Cr-1	299 mm
Ct-1	299 mm
L	426 mm
P-1	86 mm
P-2	86 mm
P-3	86 mm
ØDi-1	160 mm
ØDi-2	160 mm

ØDi-3	160 mm
ß	45 °

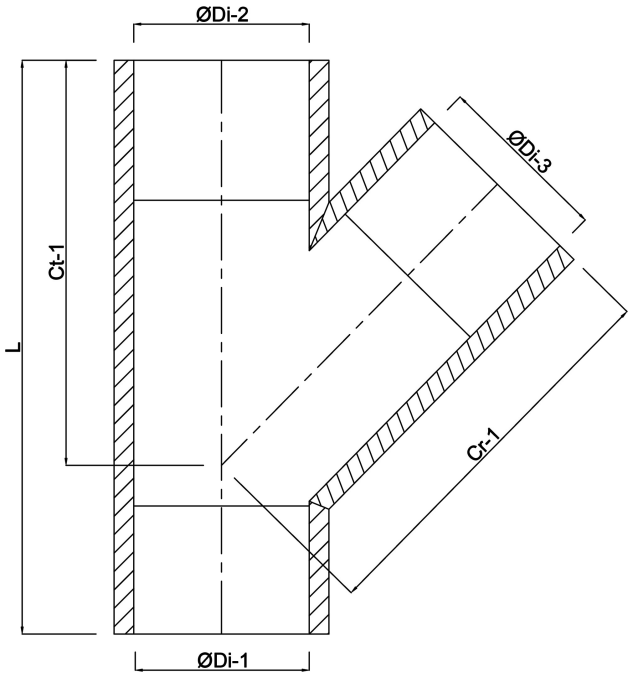

Last modified date: 01/11/2026

Bosta UK Ltd.
Reflection House
Olding Road
Bury St. Edmunds
Suffolk
IP33 3TA
T +44 (0) 1284 716580
E enquiries@bosta.co.uk
http://www.bosta.com