Profec Non return valve ductile iron (GGG40) epoxy coating DN300 DIN flange 10bar DN300 blue PN10 (0401937)



PROFEC

bosta
bringing water to life

TECHNICAL SPECIFICATIONS

Colour	blue
Material	ductile iron (GGG40)
Surface treatment	epoxy coating
Material cover	cast iron GG 40
Material housing	ductile iron (GGG40)
Material seal	NBR
Connection	DIN flange
Gasket	NBR
DIN Standard	DIN 2501
Temperature range	-20°C - 100°C
RAL number	RAL5017
Opening pressure	1 bar
Pressure	10 bar
Ball material	ductile iron/NBR
Size	DN300
WebshopURL	https://www.bosta.com/en-gb/profec-non-return-valve-ductile-iron-ggg40-epoxy-coating-dn300-din-flange-10bar-dn300-blue-pn10-0401937

Length	700 mm
DN	300
Flange	PN10
Outer ø	445 mm
Holes	12

DIMENSIONS

Construction length	din 3202 f6
Ct-1	531 mm
Install. length	din 3202 f6
L	700 mm
PCD	400/410 mm

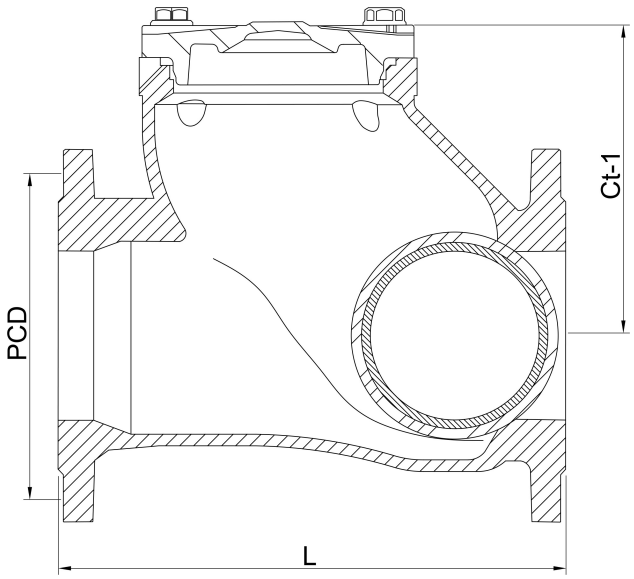

bosta
bringing water to life

Last modified date: 31/10/2026

Bosta UK Ltd.
Reflection House
Olding Road
Bury St. Edmunds
Suffolk
IP33 3TA
T +44 (0) 1284 716580
E enquiries@bosta.co.uk
http://www.bosta.com

bosta
bringing water to life