Profec Ball valve single union PVC-U 1 1/2" imperial glue socket 16bar grey type Safe 525 (0169932)



PROFEC

bosta
bringing water to life

TECHNICAL SPECIFICATIONS

Colour	grey
Type	Safe 525
Material	PVC-U
Operation	lever
Colour lever	red
Handle material	PVC-U
Housing construction	2-part
Ball material	PVC-U
Material housing	PVC-U
Material seal	hytrel/EPDM
Connection	imperial glue socket
Max. temperature	60 °C
Minimum medium temperature (continuous)	0 °C
Size	1 1/2"
WebshopURL	https://www.bosta.com/en-gb/profec-ball-valve-single-union-pvc-u-1-1-2-imperial-glue-socket-16bar-grey-type-safe-525-0169932

Pressure	16 bar

DIMENSIONS

Ct-1	93 mm
Lb	143 mm
R	65 mm
ØDf	47.5 mm
ØDi-1	1 1/2 "
ØDi-2	1 1/2 "

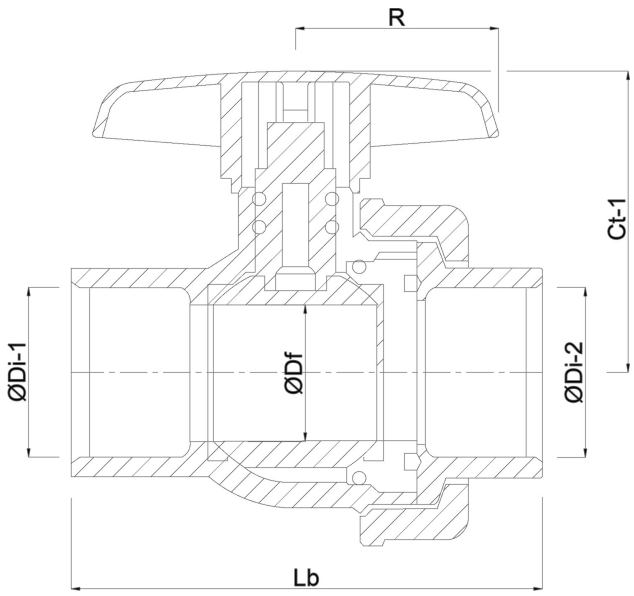

PRODUCT INFORMATION

With secured ball.

Last modified date: 31/10/2026

Bosta UK Ltd.
Reflection House
Olding Road
Bury St. Edmunds
Suffolk
IP33 3TA
T +44 (0) 1284 716580
E enquiries@bosta.co.uk
http://www.bosta.com

bosta
bringing water to life